INDUSTRIAL ELECTRONICS N2

JUNE 2022

QUESTION 1

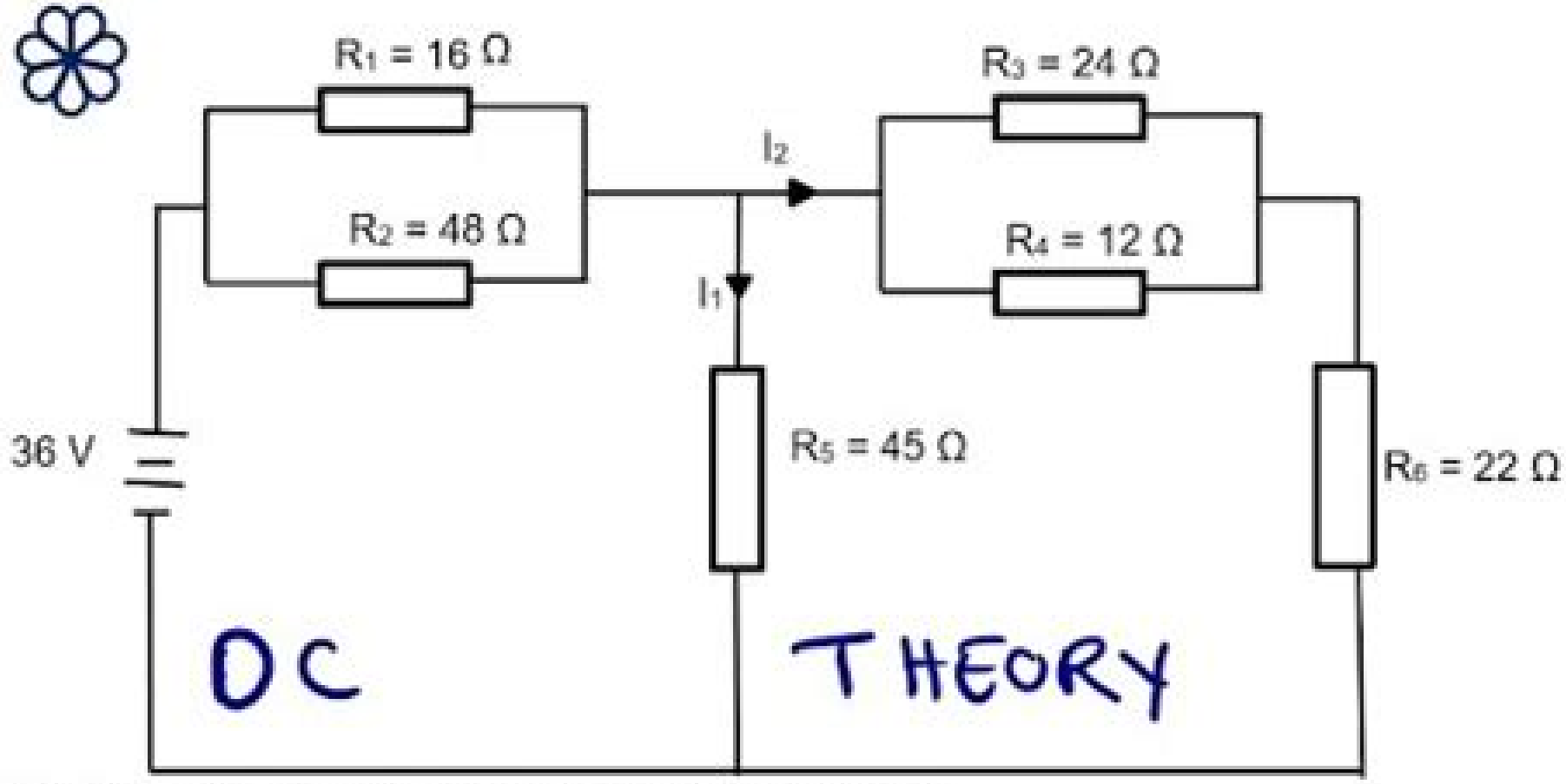

Referring to the circuit above, determine the following:

N2 Direct Theory Questions

B Lingard

N2 Direct Theory Questions:

THEORY AND METHODS OF SURVEY SAMPLING, SECOND EDITION MUKHOPADHYAY, PARIMAL,2008-12-19 This is a comprehensive exposition of survey sampling useful both to the students of statistics for the course on sample survey and to the survey statisticians and practitioners involved in consultancy services marketing opinion polls and so on The text offers updated review of difficult classical techniques of survey sampling besides covering prediction theoretic approach of survey sampling and nonsampling errors NEW TO THIS EDITION Two new chapters Nonparametric Methods of Variance Estimation Chapter 19 and Analysis of Complex Surveys Chapter 20 have been added These would greatly benefit the readers KEY FEATURES Covers concepts of unequal probability sampling Provides problems of making inference from finite population using tools of classical inference Describes nonsampling errors including Randomised Response Techniques Gives over 70 worked out examples and more than 120 problems and solutions Supplies live data from India and Sweden in examples and exercises What the Reviewer says This is a very comprehensive modern text on survey sampling with a strong slant towards theoretical results The book is an excellent reference book and would be a good graduate level sampling text for a course with an emphasis on sampling theory JESSE C ARNOLD Virginia Polytechnic Institute and State University A Course in the Theory of Groups Derek J.S. Robinson,2012-12-06 A Course in the Theory of Groups is a comprehensive introduction to the theory of groups finite and infinite commutative and non commutative Presupposing only a basic knowledge of modern algebra it introduces the reader to the different branches of group theory and to its principal accomplishments While stressing the unity of group theory the book also draws attention to connections with other areas of algebra such as ring theory and homological algebra This new edition has been updated at various points some proofs have been improved and lastly about thirty additional exercises are included There are three main additions to the book In the chapter on group extensions an exposition of Schreier s concrete approach via factor sets is given before the introduction of covering groups This seems to be desirable on pedagogical grounds Then S Thomas s elegant proof of the automorphism tower theorem is included in the section on complete groups Finally an elementary counterexample to the Burnside problem due to N D Gupta has been added in the chapter on finiteness properties **Algebraic, Number Theoretic, and Topological Aspects of Ring Theory** Jean-Luc Chabert,Marco Fontana,Sophie Frisch,Sarah Glaz,Keith Johnson,2023-07-07 This volume has been curated from two sources presentations from the Conference on Rings and Polynomials Technische Universit t Graz Graz Austria July 19 24 2021 and papers intended for presentation at the Fourth International Meeting on Integer valued Polynomials and Related Topics CIRM Luminy France which was cancelled due to the pandemic The collection ranges widely over the algebraic number theoretic and topological aspects of rings algebras and polynomials Two areas of particular note are topological methods in ring theory and integer valued polynomials The book is dedicated to the memory of Paul Jean Cahen a coauthor or research collaborator with some of the conference participants and a friend to many of the

others This collection contains a memorial article about Paul Jean Cahen written by his longtime research collaborator and coauthor Jean Luc Chabert *The Theory of Electrons and Its Applications to the Phenomena of Light and Radiant Heat* Hendrik Antoon Lorentz,1909 Mathematical Questions and Solutions in Continuation of the Mathematical Columns of "the Educational Times" ,1883 Mathematical Questions with Their Solutions ,1882 Computer Science - Theory and Applications Edward Hirsch,Sergei O. Kuznetsov,Jean-Éric Pin,Nikolay Vereshchagin,2014-06-02 This book constitutes the proceedings of the 9th International Computer Science Symposium in Russia CSR 2014 held in Moscow Russia in June 2014 The 27 full papers presented in this volume were carefully reviewed and selected from 76 submissions In addition the book contains 4 invited lectures The scope of the proposed topics is quite broad and covers a wide range of areas in theoretical computer science and its applications **Ring Theory and Its Applications** Dinh Van Huynh, S. K. Jain, Sergio R. López-Permouth,S. Tariq Rizvi,Cosmin S. Roman,2014-02-21 This volume contains the proceedings of the Ring Theory Session in honor of T Y Lam s 70th birthday at the 31st Ohio State Denison Mathematics Conference held from May 25 27 2012 at The Ohio State University Columbus Ohio Included are expository articles and research papers covering topics such as cyclically presented modules Eggert s conjecture the Mittag Leffler conditions clean rings McCoy rings QF rings projective and injective modules Baer modules and Leavitt path algebras Graduate students and researchers in many areas of algebra will find this volume valuable as the papers point out many directions for future work in particular several articles contain explicit lists of open questions Proceedings of the National Academy of Sciences of the United States of America National Academy of Sciences (U.S.),1915 The Proceedings of the National Academy of Sciences PNAS publishes research reports commentaries reviews colloquium papers and actions of the Academy PNAS is a multidisciplinary journal that covers the biological physical and social sciences **Mathematical Questions and Solutions, from the "Educational Times."** ,1883 **Direct and Inverse Problems of Electromagnetic and Acoustic Wave Theory** ,2000 *The magnetic circuit in theory and practice, tr. by dr. Atkinson* Henri E J.G. Du Bois,1896 The Magnetic Circuit in Theory and Practice Henri DuBois,1896 The General Principles Daniel Frost Comstock,1911 Quantum Field Theory Peter Breitenlohner,2000-10-04 On the occasion of W Zimmermann s 70th birthday some eminent scientists gave review talks in honor of one of the great masters of quantum field theory It was decided to write them up and publish them in this book together with reprints of some seminal papers of the laureate Thus this volume deepens our understanding of anomalies algebraic renormalization theory axiomatic field theory and of much more while illuminating the past and present state of affairs and pointing to interesting problems for future research *The Sanitary Record and Journal of Sanitary and Municipal Engineering* ,1889 Journal of the London Mathematical Society London Mathematical Society,1928 **Science Abstracts** ,1909 *The Observatory* ,1926 A review of astronomy varies **On the Physical Aspect of the Atomic Theory** Joseph Larmor,1908

Whispering the Secrets of Language: An Psychological Journey through **N2 Direct Theory Questions**

In a digitally-driven earth wherever displays reign great and immediate communication drowns out the subtleties of language, the profound strategies and mental subtleties hidden within phrases frequently move unheard. However, set within the pages of **N2 Direct Theory Questions** a interesting literary prize sporting with fresh thoughts, lies an exceptional quest waiting to be undertaken. Composed by a talented wordsmith, this charming opus invites viewers on an introspective trip, lightly unraveling the veiled truths and profound impact resonating within the very fabric of each word. Within the emotional depths of the emotional review, we will embark upon a honest exploration of the book is key styles, dissect its fascinating publishing fashion, and fail to the strong resonance it evokes heavy within the recesses of readers hearts.

https://siliconezone.com/files/publication/Documents/daihatsu_charade_g100_gtti_1987_factory_service_repair_manual.pdf

Table of Contents N2 Direct Theory Questions

1. Understanding the eBook N2 Direct Theory Questions
    - The Rise of Digital Reading N2 Direct Theory Questions
    - Advantages of eBooks Over Traditional Books
2. Identifying N2 Direct Theory Questions
    - Exploring Different Genres
    - Considering Fiction vs. Non-Fiction
    - Determining Your Reading Goals
3. Choosing the Right eBook Platform
    - Popular eBook Platforms
    - Features to Look for in an N2 Direct Theory Questions
    - User-Friendly Interface
4. Exploring eBook Recommendations from N2 Direct Theory Questions
    - Personalized Recommendations
    - N2 Direct Theory Questions User Reviews and Ratings

    - N2 Direct Theory Questions and Bestseller Lists
5. Accessing N2 Direct Theory Questions Free and Paid eBooks
    - N2 Direct Theory Questions Public Domain eBooks
    - N2 Direct Theory Questions eBook Subscription Services
    - N2 Direct Theory Questions Budget-Friendly Options
6. Navigating N2 Direct Theory Questions eBook Formats
    - ePub, PDF, MOBI, and More
    - N2 Direct Theory Questions Compatibility with Devices
    - N2 Direct Theory Questions Enhanced eBook Features
7. Enhancing Your Reading Experience
    - Adjustable Fonts and Text Sizes of N2 Direct Theory Questions
    - Highlighting and Note-Taking N2 Direct Theory Questions
    - Interactive Elements N2 Direct Theory Questions
8. Staying Engaged with N2 Direct Theory Questions
    - Joining Online Reading Communities
    - Participating in Virtual Book Clubs
    - Following Authors and Publishers N2 Direct Theory Questions
9. Balancing eBooks and Physical Books N2 Direct Theory Questions
    - Benefits of a Digital Library
    - Creating a Diverse Reading Collection N2 Direct Theory Questions
10. Overcoming Reading Challenges
    - Dealing with Digital Eye Strain
    - Minimizing Distractions
    - Managing Screen Time
11. Cultivating a Reading Routine N2 Direct Theory Questions
    - Setting Reading Goals N2 Direct Theory Questions
    - Carving Out Dedicated Reading Time
12. Sourcing Reliable Information of N2 Direct Theory Questions
    - Fact-Checking eBook Content of N2 Direct Theory Questions
    - Distinguishing Credible Sources

13. Promoting Lifelong Learning
    - Utilizing eBooks for Skill Development
    - Exploring Educational eBooks
14. Embracing eBook Trends
    - Integration of Multimedia Elements
    - Interactive and Gamified eBooks

N2 Direct Theory Questions Introduction

In the digital age, access to information has become easier than ever before. The ability to download N2 Direct Theory Questions has revolutionized the way we consume written content. Whether you are a student looking for course material, an avid reader searching for your next favorite book, or a professional seeking research papers, the option to download N2 Direct Theory Questions has opened up a world of possibilities. Downloading N2 Direct Theory Questions provides numerous advantages over physical copies of books and documents. Firstly, it is incredibly convenient. Gone are the days of carrying around heavy textbooks or bulky folders filled with papers. With the click of a button, you can gain immediate access to valuable resources on any device. This convenience allows for efficient studying, researching, and reading on the go. Moreover, the cost-effective nature of downloading N2 Direct Theory Questions has democratized knowledge. Traditional books and academic journals can be expensive, making it difficult for individuals with limited financial resources to access information. By offering free PDF downloads, publishers and authors are enabling a wider audience to benefit from their work. This inclusivity promotes equal opportunities for learning and personal growth. There are numerous websites and platforms where individuals can download N2 Direct Theory Questions. These websites range from academic databases offering research papers and journals to online libraries with an expansive collection of books from various genres. Many authors and publishers also upload their work to specific websites, granting readers access to their content without any charge. These platforms not only provide access to existing literature but also serve as an excellent platform for undiscovered authors to share their work with the world. However, it is essential to be cautious while downloading N2 Direct Theory Questions. Some websites may offer pirated or illegally obtained copies of copyrighted material. Engaging in such activities not only violates copyright laws but also undermines the efforts of authors, publishers, and researchers. To ensure ethical downloading, it is advisable to utilize reputable websites that prioritize the legal distribution of content. When downloading N2 Direct Theory Questions, users should also consider the potential security risks associated with online platforms. Malicious actors may exploit vulnerabilities in unprotected websites to distribute malware or steal personal information. To protect themselves, individuals should ensure their devices have reliable antivirus software installed and

validate the legitimacy of the websites they are downloading from. In conclusion, the ability to download N2 Direct Theory Questions has transformed the way we access information. With the convenience, cost-effectiveness, and accessibility it offers, free PDF downloads have become a popular choice for students, researchers, and book lovers worldwide. However, it is crucial to engage in ethical downloading practices and prioritize personal security when utilizing online platforms. By doing so, individuals can make the most of the vast array of free PDF resources available and embark on a journey of continuous learning and intellectual growth.

FAQs About N2 Direct Theory Questions Books

What is a N2 Direct Theory Questions PDF? A PDF (Portable Document Format) is a file format developed by Adobe that preserves the layout and formatting of a document, regardless of the software, hardware, or operating system used to view or print it. **How do I create a N2 Direct Theory Questions PDF?** There are several ways to create a PDF: Use software like Adobe Acrobat, Microsoft Word, or Google Docs, which often have built-in PDF creation tools. Print to PDF: Many applications and operating systems have a "Print to PDF" option that allows you to save a document as a PDF file instead of printing it on paper. Online converters: There are various online tools that can convert different file types to PDF. **How do I edit a N2 Direct Theory Questions PDF?** Editing a PDF can be done with software like Adobe Acrobat, which allows direct editing of text, images, and other elements within the PDF. Some free tools, like PDFescape or Smallpdf, also offer basic editing capabilities. **How do I convert a N2 Direct Theory Questions PDF to another file format?** There are multiple ways to convert a PDF to another format: Use online converters like Smallpdf, Zamzar, or Adobe Acrobats export feature to convert PDFs to formats like Word, Excel, JPEG, etc. Software like Adobe Acrobat, Microsoft Word, or other PDF editors may have options to export or save PDFs in different formats. **How do I password-protect a N2 Direct Theory Questions PDF?** Most PDF editing software allows you to add password protection. In Adobe Acrobat, for instance, you can go to "File" -> "Properties" -> "Security" to set a password to restrict access or editing capabilities. Are there any free alternatives to Adobe Acrobat for working with PDFs? Yes, there are many free alternatives for working with PDFs, such as: LibreOffice: Offers PDF editing features. PDFsam: Allows splitting, merging, and editing PDFs. Foxit Reader: Provides basic PDF viewing and editing capabilities. How do I compress a PDF file? You can use online tools like Smallpdf, ILovePDF, or desktop software like Adobe Acrobat to compress PDF files without significant quality loss. Compression reduces the file size, making it easier to share and download. Can I fill out forms in a PDF file? Yes, most PDF viewers/editors like Adobe Acrobat, Preview (on Mac), or various online tools allow you to fill out forms in PDF files by selecting text fields and entering information. Are there any restrictions when working with PDFs? Some PDFs might have restrictions set by their creator, such as password

protection, editing restrictions, or print restrictions. Breaking these restrictions might require specific software or tools, which may or may not be legal depending on the circumstances and local laws.

Find N2 Direct Theory Questions :

daihatsu charade g100 gtti 1987 factory service repair manual
daisy colt bb gun manual
~~daily warm ups figurative language level ii daily warm ups~~
daihatsu hijet s40 workshop manual
dance tunes caslav region ukulele
daihatsu feroza sportrak rocky f300 hd engine workshop manual 1987 1988 1989 1990 1991 1992 1993 1994 1995 1996 1997 1998
daily language practice 7th
daily paragraph editing grade 5 by mathews lisa v 2004 paperback
~~daily wisdom women devotional collection ebook~~
dancing naked in the mind field
daffodils by willium wordsworth figure of speech
daily planet special superman ii edition
daihatsu 6dk20 manual
daily schedule for day summer camp
daihatsu delta manual

N2 Direct Theory Questions :

Peerless Transmission VST205 internals manual Dec 6, 2019 — Hi all I have a Bolens/Troy-Bilt ride on mower which has a Peerless Transmission VST205 type. I cannot find the exact model number as where it is has been. tecumseh peerless transaxle vst205 series service/shop ... This TECUMSEH PEERLESS TRANSAXLE VST205 SERIES SERVICE/SHOP PDF REPAIR MANUAL DOWNLOAD will guide you through fundamentals of maintaining and repairing, ... Peerless Transaxle Mechanics Manual Use this handbook with the pertinent. Divisions of the Master Parts Manual. The Parts List will show the exact parts for any Peerless unit. This handbook points ... Tecumseh / Peerless Motion Drive System This manual covers all Peerless® Gear models as follows: Right Angle and T ... C Tecumseh Products Company. 1996. NOTE: The VST Series is not

addressed in this ... Tecumseh Peerless® Transmission Transaxles Differentials ... This manual covers all Tecumseh Peerless® gear products as follows: 100 Series Differentials. MST200 Series Transaxles. 300 Series Transaxles. 600 Series ... 131041299999) Peerless VST 205 Hydro Transmission ... Troy Bilt 13104 15.5HP HydroStatic LTX Tractor (S/N 131041200101 - 131041299999) Peerless VST 205 Hydro Transmission Breakdown Exploded View parts lookup by ... Peerless 205 Hydrostatic Transmission Repair Group I've created this group to help owners of Ride -on mowers fitted with the Peerless 205 hydrostatic transmission to help and share advice as to how to Tecumseh Peerless Transmission Transaxles Differentials ... Tecumseh Peerless Transmission Transaxles Differentials Service Repair Manual 691218 PDF. Uploaded by. John Lang. 100%(1)100% found this document useful (1 ... IS THERE ANY WAY TO GET A PARTS MANUAL FOR ... Sep 21, 2010 — IS THERE ANY WAY TO GET A PARTS MANUAL FOR A PEERLESS VST 205-023B AND ORDERING PARTS DIRECT FRPM THE MANUFACTURER: - Answered by a verified ... Peerless VST 205 Hyrdo Transmission Peerless VST205 Hydro Transmission. The oil for the Hydro Side where the bellows is part no. 730228 or 730228A. You need 56oz or about 1.7 litres to replace it. Park's Textbook Of Preventive And Social Medicine Park's Textbook Of Preventive And Social Medicine ; Publication date. January 1, 2021 ; Dimensions. 7.99 x 10 x 1.85 inches ; ISBN-10. 9382219161 ; ISBN-13. 978- ... preventive and social medicine Park's Textbook of. PREVENTIVE. AND SOCIAL. MEDICINE. BHANOT. K. PARK. 23 rd. EDITION. Page 2. The Book is dedicated to the revered memory of my husband. DR. Park Textbook of Preventive and Social Medicine 23rd ... Park Textbook of Preventive and Social Medicine 23rd edition (park psm) [Hardcover] [Jan 01, 2015] Park [K. Park] on Amazon.com. Park's textbook of preventive and social medicine Park's textbook of preventive and social medicine ; Author: K. Park (Author) ; Edition: Twenty-third edition View all formats and editions ; Publisher: Bhanot ... Park's Textbook of Prentive and Social Medicine 22/e Park's Textbook of Preventive and Social Medicine. K. Park. Published by Banarsidas Bhanot (2013). ISBN 10: 9382219021 ISBN 13: 9789382219026. New Hardcover ... Park, K. (2007) Parks Textbook of Preventive and Social ... Park, K. (2007) Parks Textbook of Preventive and Social Medicine. 19th Edition, M/S Banarsidas Bhanot Publishers, Jabalpur, 798-806. Park's Textbook of Preventive and Social Medicine Park's Textbook of Preventive and Social Medicine. K. Park. 3.89. 1,655 ratings ... Preventive and social medicine best book book for medical students. This ... Park's textbook of preventive and social medicine Park's textbook of preventive and social medicine ; Author: K. Park ; Edition: 20th ed View all formats and editions ; Publisher: M/S Banarsidas Bhanot, Jabalpur, ... Park's Textbook of Preventive and Social Medicine Park's Textbook of Preventive and Social Medicine. 1 ratings by Goodreads · K. Park. Published by Banarsidas Bhanot, 2013. ISBN 10: 9382219021 / ISBN 13 ... Park's Textbook Of Preventive And Social Medicine Park's Textbook Of Preventive And Social Medicine ; Author(s): K PARK ; Edition: 26TH ; Published Year: 2021 ; ISBN: 978-9382219163 ; Availability: In Stock. LEYLAND Service Manuals & Wiring Diagrams PDF LEYLAND Service Manuals & Wiring Diagrams PDF. Download. Leyland Titan Repair Manual. Leyland Titan Repair Manual. Leyland Titan Repair ... Leyland Bus Engine Repair Manual Full PDF Sep

27, 2022 — Leyland Bus Engine Repair Manual leyland-bus-engine-repair-manual. 7 ... Leyland Bus Engine Repair Manual leyland-bus-engine-repair-manual. 8. Leyland Titan Repair Manual.pdf Leyland Truck and Bus LEYPARTS. Manufactured exactly to original ... Check engine coolant level by depressing, dependent upon vehicle specification, either. LEYLAND | Workshop Service Manuals | PDF Downloads Leyland, Marina 1500, Marina 1750, P76, V8, BLMC, Factory Workshop Manuals, High Quality PDF, Immediate Download, bookmarked. Restore your Leyland now! Leyland Bus Engine Repair Manual Oct 4, 2023 — The Enigmatic Realm of Leyland Bus Engine Repair Manual: Unleashing the Language is Inner ... Leyland Bus Engine Repair Manual leyland-bus-engine ... Leyland Titan Repair Manual PDF LEYLAND TITAN Repair Operation Manual Leyland Truck & Bus Passenger Vehicle Division adquarters: Service ... engine compartment fan and cause possible injury to ... Leyland Titan Repair Manual | PDF LEYLAND TITAN Repair Operation Manual Leyland Truck & Bus Passenger Vehicle Division adquarters: Service: Windmill Lane, Southall UB2 4NJ Leyland, Preston ... Leyland Service Manual for Q-Cab Models 245/262/272 ... Sep 21, 2016 — Leyland Service Manual for Q-Cab Models 245, 262, 272, 282, 462, 472, and 482. Leyland Diesel Engine Manuals Service Manual. AV 471. AV 505. manual for complete vehicle with sections about the engines. 304 pages publ. August 1969. free download. 14 MB file. Leyland ... Leyland National Bus : Operating Instruction Manual For ... The purpose of this book is to provide basic operating information to all drivers. Instruments and controls and their functions are described in detail.