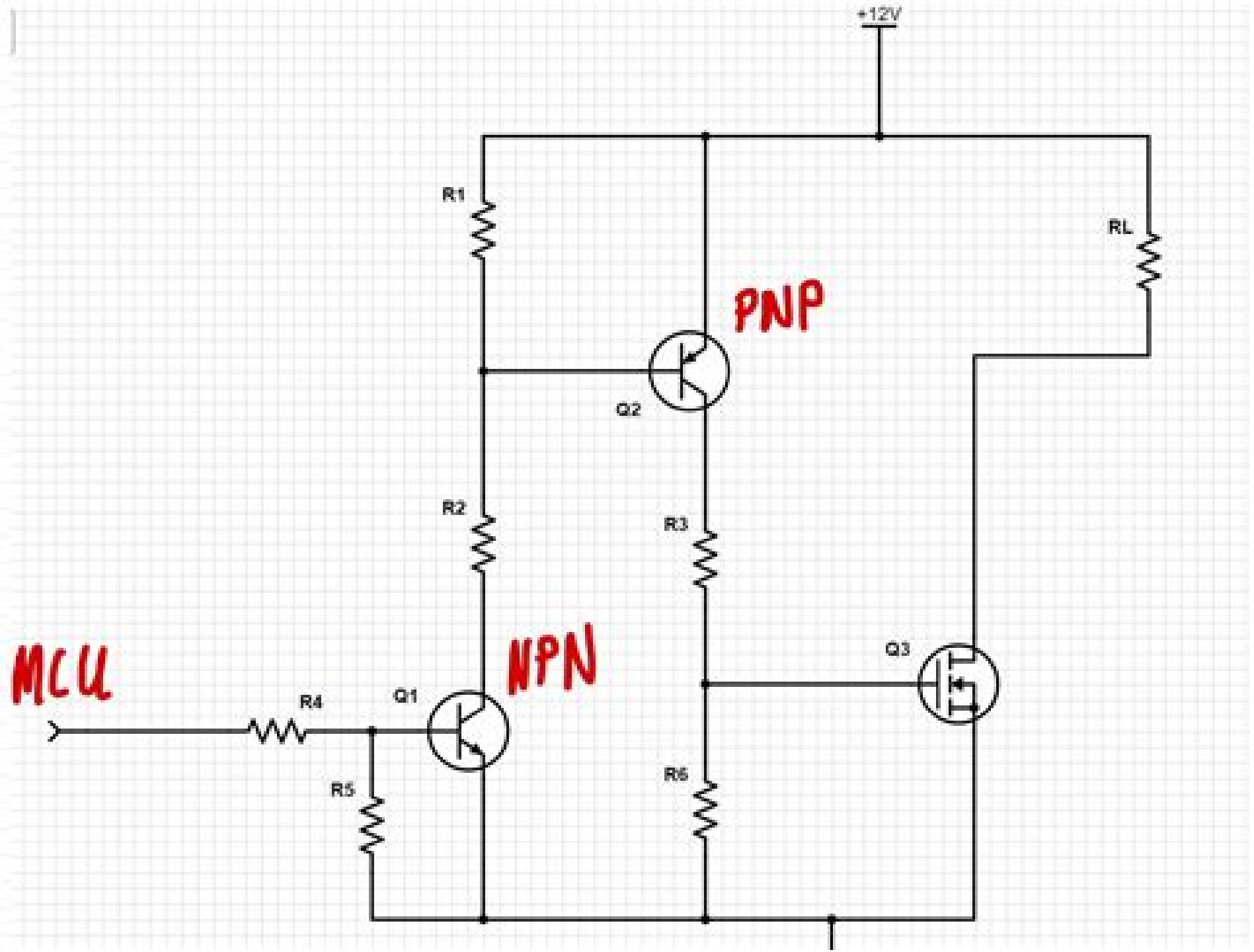
+12V
R1
RL
PNP
Q2
R2
R3
MCU
NPN
Q3
R4
Q1
R5
R6

Fet Circuits

C Cleary

Fet Circuits:

Diode, Transistor & Fet Circuits Manual R. M. Marston,2013-10-22 Diode Transistor and FET Circuits Manual is a handbook of circuits based on discrete semiconductor components such as diodes transistors and FETS The book also includes diagrams and practical circuits The book describes basic and special diode characteristics heat wave rectifier circuits transformers filter capacitors and rectifier ratings The text also presents practical applications of associated devices for example zeners varicaps photodiodes or LEDs as well as it describes bipolar transistor characteristics The transistor can be used in three basic amplifier configurations such as common collector common emitter or common base Oscillators and multivibrators use transistors as linear amplifying elements or as digital switching elements respectively In other practical applications bipolar transistors are used in audio pre amp tone control and power amplifier applications For example the book illustrates the ideal form and location of the volume control where it is fully d c isolated from the pre amplifier s output The book cites other applications of transistor circuits in a noise limiter in astable multivibrators in L C oscillators and in lie detectors This book is suitable for radio television and electronics technicians design and application engineers and students in electronics or radio communications **Device Circuit Co-Design Issues in FETs** Shubham Tayal,Billel Smaani,Shiromani Balmukund Rahi,Samir Labiod,Zeinab Ramezani,2023-08-22 This book provides an overview of emerging semiconductor devices and their applications in electronic circuits which form the foundation of electronic devices Device Circuit Co Design Issues in FETs provides readers with a better understanding of the ever growing field of low power electronic devices and their applications in the wireless biosensing and circuit domains The book brings researchers and engineers from various disciplines of the VLSI domain together to tackle the emerging challenges in the field of engineering and applications of advanced low power devices in an effort to improve the performance of these technologies The chapters examine the challenges and scope of FinFET device circuits 3D FETs and advanced FET for circuit applications The book also discusses low power memory design neuromorphic computing and issues related to thermal reliability The authors provide a good understanding of device physics and circuits and discuss transistors based on the new channel dielectric materials and device architectures to achieve low power dissipation and ultra high switching speeds to fulfill the requirements of the semiconductor industry This book is intended for students researchers and professionals in the field of semiconductor devices and nanodevices as well as those working on device circuit co design issues **Thin-Film Transistors** Cherie R. Kagan,Paul Andry,2003-02-25 This is a single source treatment of developments in TFT production from international specialists It interweaves overlapping areas in multiple disciplines pertinent to transistor fabrication and explores the killer application of amorphous silicon transistors in active matrix liquid crystal displays It evaluates the preparation of polycrystallin **Basic Electronics** Debashis De,2010 Basic Electronics meant for the core science and technology courses in engineering colleges and universities has been designed with the key objective of enhancing the students knowledge in the

field of electronics Solid state electronics a rapidly evolving field of study has been extensively researched for the latest updates and the authors have supplemented the related chapters with customized pedagogical features The required knowledge in mathematics has been developed throughout the book and no prior grasp of physical electronics has been assumed as an essential requirement for understanding the subject Detailed mathematical derivations illustrated by solved examples enhance the understanding of the theoretical concepts With its simple language and clear cut style of presentation this book presents an intelligent understanding of a complex subject like electronics *1994 IEEE International Symposium on Circuits and Systems* ,1994 **IEEE Circuits & Devices** ,2003 Carbon-Based Electronics Ashok Srivastava,Jose Mauricio Marulanda,Yao Xu,Ashwani Sharma,2015-03-19 Discovery of one dimensional material carbon nanotubes in 1991 by the Japanese physicist Dr Sumio Iijima has resulted in voluminous research in the field of carbon nanotubes for numerous applications including possible replacement of silicon used in the fabrication of CMOS chips One interesting feature of carbon nanotubes is that these can be me **Electronic Circuits** Norbert R. Malik,1995 A text for a two semester electronics sequence for majors in electrical engineering serving the special needs of computer engineers by allowing readers to advance to digital topics and skip linear applications Assumes prior knowledge of circuit theory Laplace transforms and transfer functions and ideal logic gates Covers instrumentation oriented topics emphasizing operational amplifiers and integrates SPICE modeling throughout the text Includes summaries problems and b w illustrations Annotation c Book News Inc Portland OR booknews com **Electronic Devices and Circuits** David A. Bell,1999 **Handbook of Electronic Circuits** Graham J. Scoles,1975 *Electronics: BJTs, FETs, and Microcircuits* E. James Angelo, Jr.,1969 *Semiconductor Devices and Circuits* Aloke Dutta,2008 Semiconductor Devices and Circuits is aimed at undergraduate students of engineering for an introductory course on devices circuits The book covers in detail the basic theories and principles of both devices and circuits Beginning with the fundamental concepts the book gives an exhaustive coverage of topics such as basic semiconductor physics crystal sturctures junction diode bipolar junction transistor MOS capacitor MOSFET baising frequency response of amplifiers and operational amplifiers Written in a very lucid and student friendly style the book contains plenty of solved examples interspersed in the text for easy understanding of concepts References have also been given at the end of the book for students interested in further reading of the topics Numerous exercises at the end of each chapter challenge readers to test their understanding of concepts **Handbook of Practical Electronic Circuits** John D. Lenk,1982 *FET Modeling for Circuit Simulation* Dileep A. Divekar,2012-12-06 Circuit simulation is widely used for the design of circuits both discrete and integrated Device modeling is an impor tant aspect of circuit simulation since it is the link between the physical device and the sim ulate d device Curren tly available circuit simulation programs provide a variety of built in models Many circuit designers use these built in models whereas some incorporate new models in the circuit sim ulation programs Understanding device modeling with particular emphasis on circuit simulation will

be helpful in utilizing the built in models more efficiently as well as in implementing new models SPICE is used as a vehicle since it is the most widely used circuit sim ulation program How ever some issues are addressed which are not directly appli cable to SPICE but are applicable to circuit simulation in general These discussions are useful for modifying SPICE and for understanding other simulation programs The gen eric version 2G 6 is used as a reference for SPICE although numerous different versions exist with different modifications This book describes field effect transistor models commonly used in a variety of circuit sim ulation pro grams Understanding of the basic device physics and some familiarity with device modeling is assumed Derivation of the model equations is not included SPICE is a circuit sim ulation program available from EECS Industrial Support Office 461 Cory Hall University of Cali fornia Berkeley CA 94720 Acknowledgements I wish to express my gratitude to Valid Logic Systems Inc *Handbook of Electronic Components and Circuits* John D. Lenk,1973 **IEEE ... Microwave and Millimeter-Wave Monolithic Circuits Symposium Digest of Papers** ,1986 **Electronic Devices and Circuits** G. J. Pridham,1968 **Electronic Devices and Circuit Theory** Robert L. Boylestad,Louis Nashelsky,1982 **Principles of Electronic Circuits** Stanley G. Burns,Paul R. Bond,1997 Accompanying CD ROM includes Evaluation version of PSPICE SPICE netlists Electronic Workbench circuit models and Acrobat transparencies **Electronic Devices and Circuits** Eric Donkor,Eric Donker,Shakib M. Saria,Larry Elowitz,1998 This self assessment guide aims to help students pass tests or exams in electronic devices circuits by providing an overview of the concepts review material and hundreds of questions on the subject area s main topics and subtopics

Delve into the emotional tapestry woven by Crafted by in **Fet Circuits** . This ebook, available for download in a PDF format (*), is more than just words on a page; itis a journey of connection and profound emotion. Immerse yourself in narratives that tug at your heartstrings. Download now to experience the pulse of each page and let your emotions run wild.

https://siliconezone.com/data/publication/Documents/ccsp%20self%20study%20cisco%20secure%20intrusion%20detection%20system%20csids%202nd%20edition.pdf

Table of Contents Fet Circuits

1. Understanding the eBook Fet Circuits
    - The Rise of Digital Reading Fet Circuits
    - Advantages of eBooks Over Traditional Books
2. Identifying Fet Circuits
    - Exploring Different Genres
    - Considering Fiction vs. Non-Fiction
    - Determining Your Reading Goals
3. Choosing the Right eBook Platform
    - Popular eBook Platforms
    - Features to Look for in an Fet Circuits
    - User-Friendly Interface
4. Exploring eBook Recommendations from Fet Circuits
    - Personalized Recommendations
    - Fet Circuits User Reviews and Ratings
    - Fet Circuits and Bestseller Lists
5. Accessing Fet Circuits Free and Paid eBooks
    - Fet Circuits Public Domain eBooks
    - Fet Circuits eBook Subscription Services
    - Fet Circuits Budget-Friendly Options

6. Navigating Fet Circuits eBook Formats
    - ePub, PDF, MOBI, and More
    - Fet Circuits Compatibility with Devices
    - Fet Circuits Enhanced eBook Features
7. Enhancing Your Reading Experience
    - Adjustable Fonts and Text Sizes of Fet Circuits
    - Highlighting and Note-Taking Fet Circuits
    - Interactive Elements Fet Circuits
8. Staying Engaged with Fet Circuits
    - Joining Online Reading Communities
    - Participating in Virtual Book Clubs
    - Following Authors and Publishers Fet Circuits
9. Balancing eBooks and Physical Books Fet Circuits
    - Benefits of a Digital Library
    - Creating a Diverse Reading Collection Fet Circuits
10. Overcoming Reading Challenges
    - Dealing with Digital Eye Strain
    - Minimizing Distractions
    - Managing Screen Time
11. Cultivating a Reading Routine Fet Circuits
    - Setting Reading Goals Fet Circuits
    - Carving Out Dedicated Reading Time
12. Sourcing Reliable Information of Fet Circuits
    - Fact-Checking eBook Content of Fet Circuits
    - Distinguishing Credible Sources
13. Promoting Lifelong Learning
    - Utilizing eBooks for Skill Development
    - Exploring Educational eBooks
14. Embracing eBook Trends
    - Integration of Multimedia Elements

- Interactive and Gamified eBooks

Fet Circuits Introduction

Free PDF Books and Manuals for Download: Unlocking Knowledge at Your Fingertips In todays fast-paced digital age, obtaining valuable knowledge has become easier than ever. Thanks to the internet, a vast array of books and manuals are now available for free download in PDF format. Whether you are a student, professional, or simply an avid reader, this treasure trove of downloadable resources offers a wealth of information, conveniently accessible anytime, anywhere. The advent of online libraries and platforms dedicated to sharing knowledge has revolutionized the way we consume information. No longer confined to physical libraries or bookstores, readers can now access an extensive collection of digital books and manuals with just a few clicks. These resources, available in PDF, Microsoft Word, and PowerPoint formats, cater to a wide range of interests, including literature, technology, science, history, and much more. One notable platform where you can explore and download free Fet Circuits PDF books and manuals is the internets largest free library. Hosted online, this catalog compiles a vast assortment of documents, making it a veritable goldmine of knowledge. With its easy-to-use website interface and customizable PDF generator, this platform offers a user-friendly experience, allowing individuals to effortlessly navigate and access the information they seek. The availability of free PDF books and manuals on this platform demonstrates its commitment to democratizing education and empowering individuals with the tools needed to succeed in their chosen fields. It allows anyone, regardless of their background or financial limitations, to expand their horizons and gain insights from experts in various disciplines. One of the most significant advantages of downloading PDF books and manuals lies in their portability. Unlike physical copies, digital books can be stored and carried on a single device, such as a tablet or smartphone, saving valuable space and weight. This convenience makes it possible for readers to have their entire library at their fingertips, whether they are commuting, traveling, or simply enjoying a lazy afternoon at home. Additionally, digital files are easily searchable, enabling readers to locate specific information within seconds. With a few keystrokes, users can search for keywords, topics, or phrases, making research and finding relevant information a breeze. This efficiency saves time and effort, streamlining the learning process and allowing individuals to focus on extracting the information they need. Furthermore, the availability of free PDF books and manuals fosters a culture of continuous learning. By removing financial barriers, more people can access educational resources and pursue lifelong learning, contributing to personal growth and professional development. This democratization of knowledge promotes intellectual curiosity and empowers individuals to become lifelong learners, promoting progress and innovation in various fields. It is worth noting that while accessing free Fet Circuits PDF books and manuals is convenient and cost-effective, it is vital to respect copyright laws and intellectual property rights. Platforms offering free downloads often operate within legal boundaries, ensuring that the materials they provide are

either in the public domain or authorized for distribution. By adhering to copyright laws, users can enjoy the benefits of free access to knowledge while supporting the authors and publishers who make these resources available. In conclusion, the availability of Fet Circuits free PDF books and manuals for download has revolutionized the way we access and consume knowledge. With just a few clicks, individuals can explore a vast collection of resources across different disciplines, all free of charge. This accessibility empowers individuals to become lifelong learners, contributing to personal growth, professional development, and the advancement of society as a whole. So why not unlock a world of knowledge today? Start exploring the vast sea of free PDF books and manuals waiting to be discovered right at your fingertips.

FAQs About Fet Circuits Books

How do I know which eBook platform is the best for me? Finding the best eBook platform depends on your reading preferences and device compatibility. Research different platforms, read user reviews, and explore their features before making a choice. Are free eBooks of good quality? Yes, many reputable platforms offer high-quality free eBooks, including classics and public domain works. However, make sure to verify the source to ensure the eBook credibility. Can I read eBooks without an eReader? Absolutely! Most eBook platforms offer web-based readers or mobile apps that allow you to read eBooks on your computer, tablet, or smartphone. How do I avoid digital eye strain while reading eBooks? To prevent digital eye strain, take regular breaks, adjust the font size and background color, and ensure proper lighting while reading eBooks. What the advantage of interactive eBooks? Interactive eBooks incorporate multimedia elements, quizzes, and activities, enhancing the reader engagement and providing a more immersive learning experience. Fet Circuits is one of the best book in our library for free trial. We provide copy of Fet Circuits in digital format, so the resources that you find are reliable. There are also many Ebooks of related with Fet Circuits. Where to download Fet Circuits online for free? Are you looking for Fet Circuits PDF? This is definitely going to save you time and cash in something you should think about.

Find Fet Circuits :

ccsp self study cisco secure intrusion detection system csids 2nd edition
~~ccma study guide~~
ccna exam prep exam 640 802 heather stevenson
cell phones manual
ceders ceders in de sneeuw

celesador lost prince justin poole
ccnp netacad lab manuals
ccna routing and switching study guide
ccna 3 scaling networks companion guide
ccnp route portable command guide free download
~~cedarapids manuals~~
ccnp tshoot cert guide
cbse guide for class 9 geo
ccna exploration 4 instructor pt lab manual
~~ccna 3 instructor lab manual~~

Fet Circuits :

art of being normal williamson lisa 9781250144270 abebooks - Nov 28 2022
web a young adult novel about two transgender teens who figure out how to navigate life with help from each other a life changing and life saving book philip pullman
the art of being normal lisa williamson google books - Jan 31 2023
web the art of being normal lisa williamson david fickling books 2015 friendship 357 pages two boys two secrets david piper has always been an outsider his parents think he s gay the
the art of being normal summary supersummary - Feb 17 2022
web the art of being normal is lisa williamson s 2018 novel about two transgender students leo denton and david piper on leo s first day at his new school he has one goal to keep his head low and not draw any attention to himself
the art of being normal a novel paperback april 10 2018 - Jul 25 2022
web apr 10 2018 this novel which won awards in the uk is a first person narrative about two transgender students and is ideal for cisgender cis readers people who identify with the gender assigned to them at birth to learn more about gender identity and what it means to be transgender a margaret ferguson book
the art of being normal a novel hardcover 31 may 2016 - Apr 21 2022
web may 31 2016 an inspiring and timely debut novel from lisa williamson the art of being normal is about two transgender friends who figure out how to navigate teen life with help from each other david piper has always been an outsider his parents think he s gay the school bully thinks he s a freak
the art of being normal a novel amazon in - Mar 21 2022

web the art of being normal a novel williamson lisa amazon in books books english books buy new 854 00 m r p 894 00 save 40 00 4 inclusive of all taxes free delivery 23 24 november details select delivery location sold and fulfilled by bookswagon quantity add to cart buy now secure transaction new 13 from 85400

the art of being normal by lisa williamson review - May 23 2022

web jul 8 2016 the art of being normal is chock a block full of plot twists which motor the novel along keeping the pages turning one in particular is not entirely unexpected if you have read any coming of

the art of being normal by lisa williamson open library - Sep 26 2022

web apr 10 2018 the art of being normal by lisa williamson lisa williamson apr 10 2018 square fish edition paperback it looks like you re offline donate Čeština cs deutsch de english en español es the art of being normal a novel by lisa williamson and lisa williamson

the art of being normal by lisa williamson goodreads - Oct 08 2023

web jan 1 2015 david piper has always been an outsider his parents think he s gay the school bully thinks he s a freak only his two best friends know the real truth david wants to be a girl on the first day at his new school leo denton has one goal to be invisible

the art of being normal lisa williamson google books - Apr 02 2023

web jan 1 2015 the art of being normal lisa williamson david fickling books jan 1 2015 young adult fiction 364 pages two outsiders two secrets david longs to be a girl leo wants to be invisible when leo stands up for david in a fight an unlikely friendship forms but things are about to get messy

the art of being normal a novel lisa williamson google books - Dec 30 2022

web an inspiring and timely debut novel from lisa williamson the art of being normal is about two transgender friends who figure out how to navigate teen life with help from each other david

the art of being normal by lisa williamson open library - Sep 07 2023

web feb 28 2023 david piper has always been an outsider his parents think he s gay the school bully thinks he s a freak only his two best friends know the real truth david wants to be a girl on the first day at his new school leo denton has one goal to be invisible

the art of being normal macmillan - Mar 01 2023

web 04 10 2018 age range 14 18 book details a young adult novel about two transgender teens who figure out how to navigate life with help from each other a life changing and life saving book philip pullman on the first day at his new

the art of being normal a novel lisa williamson google books - Jun 04 2023

web apr 10 2018 the art of being normal a novel by lisa williamson is an uplifting story about two teenagers set in the

modern day in the united kingdom the author was inspired to write this novel after

the art of being normal a novel google books - Aug 06 2023

web may 31 2016 an inspiring and timely debut novel from lisa williamson the art of being normal is about two transgender friends who figure out how to navigate teen life with help from each other david

the art of being normal a novel barnes noble - Aug 26 2022

web apr 10 2018 the art of being normal a novel by lisa williamson is an uplifting story about two teenagers set in the modern day in the united kingdom the author was inspired to write this novel after working in england s national health service in a department dedicated to helping teens who are questioning their gender identity

the art of being normal a novel kindle edition amazon com - May 03 2023

web may 31 2016 an inspiring and timely debut novel from lisa williamson the art of being normal is about two transgender friends who figure out how to navigate teen life with help from each other david piper has always been an outsider his parents think he s gay the school bully thinks he s a freak

the art of being normal edition open library - Jun 23 2022

web the art of being normal by lisa williamson lisa williamson david fickling books edition paperback it looks like you re offline donate Čeština cs deutsch de english en español es français fr hrvatski hr

the art of being normal a novel amazon com - Oct 28 2022

web apr 10 2018 amazon com the art of being normal a novel 9781250144270 williamson lisa books books teen young adult literature fiction buy new 8 29 list price 11 99 details save 3 70 31 get fast free shipping with amazon prime free returns free delivery thursday march 9 if you spend 25 on items shipped by

the art of being normal hardcover 1 jan 2015 amazon co uk - Jul 05 2023

web her debut novel for young adults the art of being normal was a best seller and won the 2016 waterstones children s book prize for best older fiction lisa lives in london with her partner step kids and a blue whippet called nelson 5 star

the greatest opposites book on earth singh lee author free - Jul 05 2023

web mar 10 2022 the greatest opposites book on earth a fabulously clever lift the flap pop up conceptual book about opposites ingenious paper engineering and gorgeous

feasts for young readers eyes the new york times - Jun 04 2023

web the greatest opposites book on earth by lee singh illustrated by tom frost 14 pp big picture press 18 99 ages 3 to 7 this big top themed offering may not

the greatest opposites book on earth open library - May 03 2023

web oct 3 2017 greatest opposites book on earth by lee singh tom frost oct 03 2017 big picture press edition board book

the greatest opposites book on earth by lee singh goodreads - Aug 06 2023
web oct 3 2017 the greatest opposites book on earth by lee singh is a delightful board book with clever novelty surprises hidden in plain sight for young readers singh has
the greatest opposites book on earth by lee singh - Mar 21 2022
web step right up and feast your eyes on opposites like you ve never seen them before this fabulously clever novelty book is full of surprises ingenious paper engineering and
the greatest opposites book on earth kirkus reviews - Apr 02 2023
web oct 3 2017 hinged flaps and other devices allow a bevy of circus performers to demonstrate opposites
loading interface goodreads - Sep 26 2022
web discover and share books you love on goodreads
the greatest opposites book on earth lee singh google books - Jul 25 2022
web step right up and feast your eyes on opposites like you ve never seen them before this fabulously clever novelty book is full of surprises ingenious paper engineering and
buy the greatest opposites book on earth book by lee singh - Feb 17 2022
web oct 3 2017 home all categories juvenile nonfiction concepts opposites the greatest opposites book on earth isbn 0763695548 ean13 9780763695545 language
the greatest opposites book on earth singh lee frost tom - Dec 30 2022
web the greatest opposites book on earth singh lee frost tom 9780763695545 books amazon ca
the greatest opposites book on earth pop up books - May 23 2022
web the greatest opposites book on earth pop up books singh lee amazon in books
the greatest opposites book on earth abebooks - Nov 28 2022
web abebooks com the greatest opposites book on earth 9780763695545 by singh lee and a great selection of similar new used and collectible books available now at great
the greatest opposites book on earth brightly - Mar 01 2023
web step right up and feast your eyes on opposites like you ve never seen them before this fabulously clever novelty book is full of surprises ingenious paper engineering and
greatest antonyms 1 273 opposites of greatest power - Nov 16 2021
web 1 273 opposites of greatest words and phrases with opposite meaning lists synonyms
what is the opposite of greatest wordhippo - Dec 18 2021
web antonyms for greatest include worst lousiest poorest shoddiest lamest nastiest trashiest crummiest junkiest and lowest

find more opposite words at wordhippo com

first folio at 400 the shakespeare words you don t know you know - Oct 16 2021

web nov 7 2023 the shakespeare words you don t know you know in a pickle with bated breath or a wild goose chase many of the words and phrases coined by william

the greatest opposites book on earth board book lift - Oct 08 2023

web oct 3 2017 purchase options and add ons step right up and feast your eyes on opposites like you ve never seen them before this fabulously clever novelty book is full of surprises ingenious paper engineering and gorgeous artwork combine to make an

the greatest opposites book on earth amazon com au - Aug 26 2022

web the greatest opposites book on earth singh lee frost tom amazon com au books

the greatest opposites book on earth hardcover barnes noble - Jan 31 2023

web oct 3 2017 step right up and feast your eyes on opposites like you ve never seen them before this fabulously clever novelty book is full of surprises ingenious paper

the greatest opposites book on earth penguin random house - Sep 07 2023

web about the greatest opposites book on earth step right up and feast your eyes on opposites like you ve never seen them before this fabulously clever novelty book is full

the greatest opposites book on earth by lee singh waterstones - Oct 28 2022

web sep 1 2015 buy the greatest opposites book on earth by lee singh from waterstones today click and collect from your local waterstones or get free uk delivery on orders

the greatest opposites book on earth lee singh bokus - Apr 21 2022

web köp the greatest opposites book on earth av lee singh skickas inom 11 20 vardagar fri frakt över 249 kr välkommen till bokus bokhandel

book review the future by naomi alderman the new york - Jan 19 2022

web 2 days ago naomi alderman s the future like much great science fiction turns the symbolic into tangible chemical reality early in her novel a woman is frozen to death

the greatest opposites book on earth singh lee amazon sg - Jun 23 2022

web hello sign in account lists returns orders cart

secondary schools the top 14 kcpe candidates have been - Jul 07 2022

web apr 12 2022 below is the full list of the schools the top 14 candidates have been called to join 1 magata bruce mackenzie 428 gilgil hills academy nakuru alliance high school gilgil hills academy 428 kcpe marks top student nationally

boniface okendo standard 2 momanyi ashley kerubo 427 makini school kibos kisumu kenya high

st mulumba academy pri sch thika municipality - Sep 09 2022

web about st mulumba academy pri sch is located in thika mulumba academy pri sch is working in education other education activities you can contact the company at 020 3318581 wheelchair accessible yes categories other education n e c education isic codes 85 8549 education other near st mulumba academy pri sch new bambini

new bambini pri sch schools in thika kenya jantareview - Feb 14 2023

web new bambini pri sch 1927 thika thika kiambu 1000 write a review send to friend save this listing view mobile print locality kenyatta get directions to new bambini pri sch business description private primary school moe code 2011228 province central district thika municipality division municipality zone kenyatta gender mixed

new bambini school thika facebook - Aug 20 2023

web mar 28 2022 new bambini school thika facebook 127 likes 151 followers posts about photos videos more posts about photos videos intro page elementary school thika kenya not yet rated 1 review photos see all photos new bambini school march 28 2022

top students share secrets of their success people daily - Oct 10 2022

web mar 29 2022 emmanuel kaberia 425 new bambini school in thika kiambu emmanuel attributed his excellent performance to hard work resilience and support from teachers with the help of my parents and teachers i am glad i emerged the best in the region kaberia who aspires to join alliance boys high school stated

new bambini school thika blog koifootwear com - Feb 02 2022

web may 6th 2018 new bambini school is a private owned mixed primary school offering 844 education system and located at thika municipality in kiambu county day only school owned by a private individual

new bambini school kiboko estate road opposite thika cloth - May 17 2023

web mar 11 2022 a very good private school located in thika uti junction opposite thika cloth mills factory on kiboko road cool education friendly environment state of the art modern classrooms and administration block high quality safe school transport swimming pool and a beautifully manicured playground with playstation children safety is

new bambini school thika elspeth huxley - Mar 03 2022

web new bambini school thika can be taken as skillfully as picked to act the flame trees of thika elspeth huxley 2014 04 03 when elspeth huxley s pioneer father buys a remote plot of land in kenya the family sets off to discover their new home five hundred acres of kenyan scrubland infested with ticks and white ants and quavering with heat

theos senior school w39v 92x thika kenya cybo - May 05 2022

web theos senior school thika see google profile hours and more for this business 3 0 cybo score theos senior school is

working in education activities review on cybo

new bambini primary school kiambu location fees kcpe - Jul 19 2023

web new bambini primary school is located in thika municipality location in juja constituency within kiambu county and is a mixed day primary school school fees and school account number for details on school fees and school account number concerning this primary school kindly contact the school headmaster s office kcpe

new bambini primary school primary school education - Mar 15 2023

web location new bambini primary school thika municipality juja kiambu county kenya get directions view on larger map

new bambini primary school phone contacts thika west - Sep 21 2023

web new bambini school is a kenyan primary school in thika west its knec s school centre code number is 11207051 below are the new bambini school phone contacts location and 2020 kcpe performance

new bambini pri sch school kiambu county shulezote - Apr 16 2023

web facts pupil classroom ratio 12 8 pupil teacher ratio 11 8 pupil toilet ratio 15 7 teachers toilets 2 total number of classrooms 11 location county kiambu constituency juja province central district thika division municipality location thika municipality staff factilities

primary schools in thika municipality location of municipality kenya - Jan 13 2023

web our primary school primaryschool co ke website contains 76 elementary educational institute information in the thika municipality location of municipality thika kenya please click on a elementary school name below

facebook - Apr 04 2022

web facebook

kiambu parents want top kcpe performers placed in schools of - Nov 11 2022

web mar 29 2022 central kiambu parents urge education ministry to place form ones in their schools of choice as they register high marks parents and teachers of new bambini school in thika celebrate

new bambini school thika banking finance gov ie - Nov 30 2021

web 2 new bambini school thika 2020 09 15 drive with my dogs up to the mukutan to watch the sun setting behind the lake and the evening shadows settle over the valleys and plains of the laikipia plateau kuki gallmann s haunting memoir of bringing up a family in kenya in the 1970s first with her husband paulo and then

new bambini primary school thika kcpe results contacts - Jun 18 2023

web new bambini primary school kcpe results location fee structure telephone number email website contacts postal address new bambini primary school is a private primary school located in municipality near thika town juja constituency in kiambu county kenya

secondary schools the top 14 kcpe candidates have been - Aug 08 2022
web education secondary schools the top 14 kcpe candidates have been called to join by brian okoth 1yr ago from left mbugua sharon wairimu 426 marks kimani ethan karuga 426 marks and diana
new bambini primary school thika municipality central - Oct 22 2023
web the new bambini primary school is an ordinary private primary school in thika municipality kenya this school is managed sponsored by private individual and offers kenya certificate of primary education kcpe which is controlled by the kenya national examination council knec under ministry of education
little kids size 10 5 3 new balance - Jan 01 2022
web discover the largest collection of new balance little kids size 10 5 3 shop online at our official store and enjoy free shipping on orders over sg 75 find the perfect fit for your active lifestyle today
list of primary schools to host junior secondary in kiambu county - Dec 12 2022
web oct 16 2023 thika west is home to some of the top junior secondary schools in kiambu here are the schools approved to offer junior secondary education in thika kiambaa several schools in kiambaa have been approved to offer junior secondary education they include read also who is ariana madix s new boyfriend daniel wai all the details juja
innova primary school ministry of education - Jun 06 2022
web innova primary school proudly enters the singapore book of records thank you to all parents pupils and staff for your support total of 1022 upcycled bags singapore book of records innova primary school proudly enters the singapore book of records