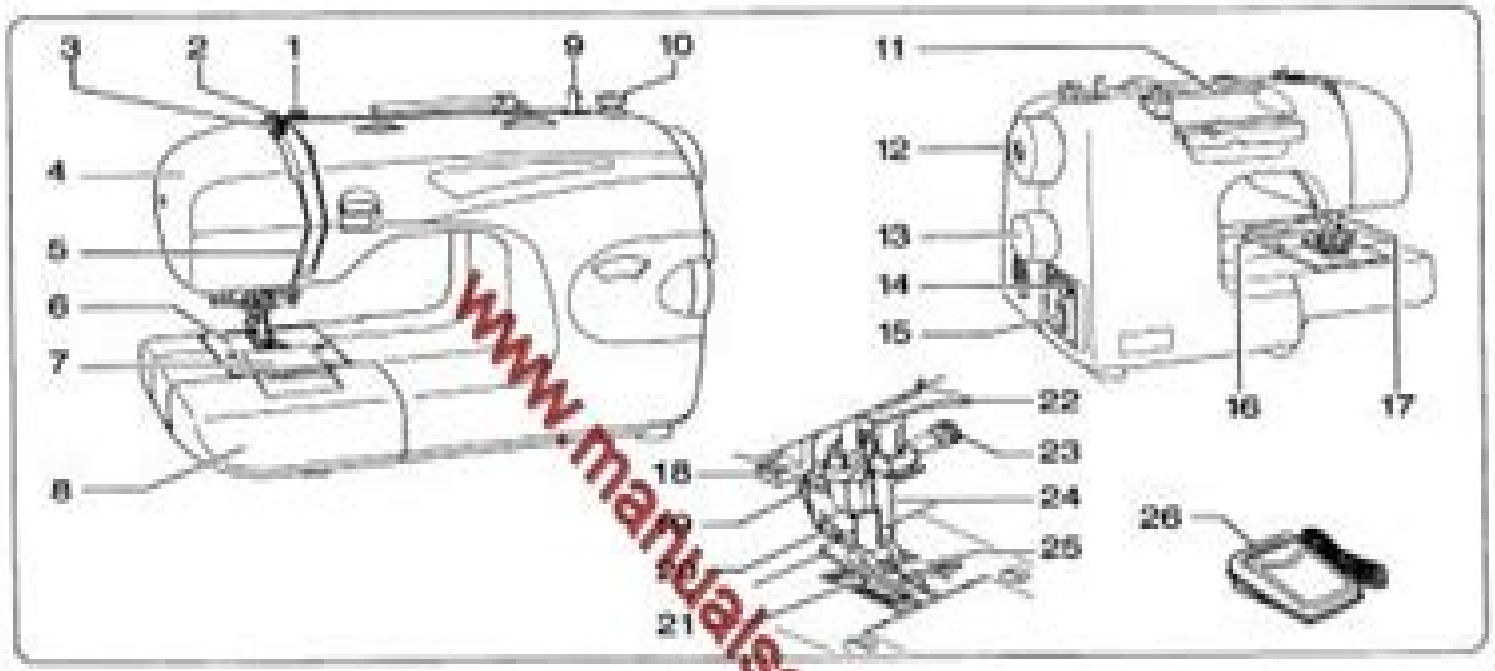

www.manualsonline.com

MACHINE IDENTIFICATION

1. Bobbin winder tension disc
2. Thread guide
3. Thread take-up
4. Face cover
5. Thread guide
6. Needle plate
7. Bobbin cover plate
8. Extension table
9. Bobbin winder shaft
10. Bobbin winder stop
11. Spool pin
12. Hand wheel
13. Stitch selector
14. Power/light switch
15. Plug socket
16. Presser foot lever
17. Thread cutter
18. Automatic needle threader
19. Presser release lever
20. Presser foot screw
21. Feed
22. Thread guide
23. Needle clamp screw
24. Needle
25. Presser foot
26. Foot control

IDENTIFICATION DE LA MAQUINA

1. Disco tensor del devanador de canillas
2. Guía hilo
3. Tira-hilos
4. Cubierta frontal
5. Guía hilo
6. Plancha aguja
7. Tapa de canilla
8. Base de extensión
9. Eje devanador canilla
10. Tope devanador canilla
11. Pasador carrete
12. Volante
13. Selector de puntadas
14. Interruptor [illegible]/luz
15. Enchufe del control por pedal
16. Palanca pie prensatelas
17. Cortador de hilo
18. Enhebrador aguja
19. Palanca de desprendimiento prensatelas
20. Tornillo pie prensatelas
21. Transporte de dientes
22. Guía hilo
23. Tornillo de sujeción aguja
24. Aguja
25. Pie prensatelas
26. Transporte de dientes

Featherweight 11 Sewing Machine Manual

DP Hallahan

Featherweight 11 Sewing Machine Manual:

Unveiling the Power of Verbal Artistry: An Mental Sojourn through **Featherweight 11 Sewing Machine Manual**

In some sort of inundated with displays and the cacophony of quick connection, the profound power and mental resonance of verbal beauty usually disappear into obscurity, eclipsed by the continuous assault of noise and distractions. However, set within the lyrical pages of **Featherweight 11 Sewing Machine Manual**, a fascinating work of literary elegance that impulses with fresh thoughts, lies an wonderful journey waiting to be embarked upon. Composed by way of a virtuoso wordsmith, this interesting opus manuals viewers on a mental odyssey, lightly revealing the latent potential and profound impact embedded within the complex internet of language. Within the heart-wrenching expanse of the evocative evaluation, we will embark upon an introspective exploration of the book is central styles, dissect their captivating publishing model, and immerse ourselves in the indelible impression it leaves upon the depths of readers souls.

https://siliconezone.com/data/virtual-library/HomePages/craftsman%2016%20radial%20arm%20saw%20manual.pdf

Table of Contents Featherweight 11 Sewing Machine Manual

1. Understanding the eBook Featherweight 11 Sewing Machine Manual
    - The Rise of Digital Reading Featherweight 11 Sewing Machine Manual
    - Advantages of eBooks Over Traditional Books
2. Identifying Featherweight 11 Sewing Machine Manual
    - Exploring Different Genres
    - Considering Fiction vs. Non-Fiction
    - Determining Your Reading Goals
3. Choosing the Right eBook Platform
    - Popular eBook Platforms
    - Features to Look for in an Featherweight 11 Sewing Machine Manual
    - User-Friendly Interface
4. Exploring eBook Recommendations from Featherweight 11 Sewing Machine Manual
    - Personalized Recommendations

    - Featherweight 11 Sewing Machine Manual User Reviews and Ratings
    - Featherweight 11 Sewing Machine Manual and Bestseller Lists
5. Accessing Featherweight 11 Sewing Machine Manual Free and Paid eBooks
    - Featherweight 11 Sewing Machine Manual Public Domain eBooks
    - Featherweight 11 Sewing Machine Manual eBook Subscription Services
    - Featherweight 11 Sewing Machine Manual Budget-Friendly Options
6. Navigating Featherweight 11 Sewing Machine Manual eBook Formats
    - ePub, PDF, MOBI, and More
    - Featherweight 11 Sewing Machine Manual Compatibility with Devices
    - Featherweight 11 Sewing Machine Manual Enhanced eBook Features
7. Enhancing Your Reading Experience
    - Adjustable Fonts and Text Sizes of Featherweight 11 Sewing Machine Manual
    - Highlighting and Note-Taking Featherweight 11 Sewing Machine Manual
    - Interactive Elements Featherweight 11 Sewing Machine Manual
8. Staying Engaged with Featherweight 11 Sewing Machine Manual
    - Joining Online Reading Communities
    - Participating in Virtual Book Clubs
    - Following Authors and Publishers Featherweight 11 Sewing Machine Manual
9. Balancing eBooks and Physical Books Featherweight 11 Sewing Machine Manual
    - Benefits of a Digital Library
    - Creating a Diverse Reading Collection Featherweight 11 Sewing Machine Manual
10. Overcoming Reading Challenges
    - Dealing with Digital Eye Strain
    - Minimizing Distractions
    - Managing Screen Time
11. Cultivating a Reading Routine Featherweight 11 Sewing Machine Manual
    - Setting Reading Goals Featherweight 11 Sewing Machine Manual
    - Carving Out Dedicated Reading Time
12. Sourcing Reliable Information of Featherweight 11 Sewing Machine Manual
    - Fact-Checking eBook Content of Featherweight 11 Sewing Machine Manual

    - Distinguishing Credible Sources
13. Promoting Lifelong Learning
    - Utilizing eBooks for Skill Development
    - Exploring Educational eBooks
14. Embracing eBook Trends
    - Integration of Multimedia Elements
    - Interactive and Gamified eBooks

Featherweight 11 Sewing Machine Manual Introduction

Free PDF Books and Manuals for Download: Unlocking Knowledge at Your Fingertips In todays fast-paced digital age, obtaining valuable knowledge has become easier than ever. Thanks to the internet, a vast array of books and manuals are now available for free download in PDF format. Whether you are a student, professional, or simply an avid reader, this treasure trove of downloadable resources offers a wealth of information, conveniently accessible anytime, anywhere. The advent of online libraries and platforms dedicated to sharing knowledge has revolutionized the way we consume information. No longer confined to physical libraries or bookstores, readers can now access an extensive collection of digital books and manuals with just a few clicks. These resources, available in PDF, Microsoft Word, and PowerPoint formats, cater to a wide range of interests, including literature, technology, science, history, and much more. One notable platform where you can explore and download free Featherweight 11 Sewing Machine Manual PDF books and manuals is the internets largest free library. Hosted online, this catalog compiles a vast assortment of documents, making it a veritable goldmine of knowledge. With its easy-to-use website interface and customizable PDF generator, this platform offers a user-friendly experience, allowing individuals to effortlessly navigate and access the information they seek. The availability of free PDF books and manuals on this platform demonstrates its commitment to democratizing education and empowering individuals with the tools needed to succeed in their chosen fields. It allows anyone, regardless of their background or financial limitations, to expand their horizons and gain insights from experts in various disciplines. One of the most significant advantages of downloading PDF books and manuals lies in their portability. Unlike physical copies, digital books can be stored and carried on a single device, such as a tablet or smartphone, saving valuable space and weight. This convenience makes it possible for readers to have their entire library at their fingertips, whether they are commuting, traveling, or simply enjoying a lazy afternoon at home. Additionally, digital files are easily searchable, enabling readers to locate specific information within seconds. With a few keystrokes, users can search for keywords, topics, or phrases, making research and finding relevant information a breeze. This efficiency saves time and effort, streamlining the learning process and allowing individuals to

focus on extracting the information they need. Furthermore, the availability of free PDF books and manuals fosters a culture of continuous learning. By removing financial barriers, more people can access educational resources and pursue lifelong learning, contributing to personal growth and professional development. This democratization of knowledge promotes intellectual curiosity and empowers individuals to become lifelong learners, promoting progress and innovation in various fields. It is worth noting that while accessing free Featherweight 11 Sewing Machine Manual PDF books and manuals is convenient and cost-effective, it is vital to respect copyright laws and intellectual property rights. Platforms offering free downloads often operate within legal boundaries, ensuring that the materials they provide are either in the public domain or authorized for distribution. By adhering to copyright laws, users can enjoy the benefits of free access to knowledge while supporting the authors and publishers who make these resources available. In conclusion, the availability of Featherweight 11 Sewing Machine Manual free PDF books and manuals for download has revolutionized the way we access and consume knowledge. With just a few clicks, individuals can explore a vast collection of resources across different disciplines, all free of charge. This accessibility empowers individuals to become lifelong learners, contributing to personal growth, professional development, and the advancement of society as a whole. So why not unlock a world of knowledge today? Start exploring the vast sea of free PDF books and manuals waiting to be discovered right at your fingertips.

FAQs About Featherweight 11 Sewing Machine Manual Books

How do I know which eBook platform is the best for me? Finding the best eBook platform depends on your reading preferences and device compatibility. Research different platforms, read user reviews, and explore their features before making a choice. Are free eBooks of good quality? Yes, many reputable platforms offer high-quality free eBooks, including classics and public domain works. However, make sure to verify the source to ensure the eBook credibility. Can I read eBooks without an eReader? Absolutely! Most eBook platforms offer web-based readers or mobile apps that allow you to read eBooks on your computer, tablet, or smartphone. How do I avoid digital eye strain while reading eBooks? To prevent digital eye strain, take regular breaks, adjust the font size and background color, and ensure proper lighting while reading eBooks. What the advantage of interactive eBooks? Interactive eBooks incorporate multimedia elements, quizzes, and activities, enhancing the reader engagement and providing a more immersive learning experience. Featherweight 11 Sewing Machine Manual is one of the best book in our library for free trial. We provide copy of Featherweight 11 Sewing Machine Manual in digital format, so the resources that you find are reliable. There are also many Ebooks of related with Featherweight 11 Sewing Machine Manual. Where to download Featherweight 11 Sewing Machine Manual online for free? Are you looking for Featherweight 11 Sewing Machine Manual PDF? This is definitely going to save you time and cash in something you should

think about.

Find Featherweight 11 Sewing Machine Manual :

craftsman 16 radial arm saw manual
crafting and executing strategy concepts and readings
cpt code for repair anterior posterior
cracking the gre with 4 practice tests 2014 edition graduate school test preparation
~~craftsman manual scroll saw~~
cps police sergeant exam sample questions
craftsman lt 1000 user manual
~~craftsman lawn mower owners manual 917~~
~~craftsman owners manual pressure washer~~
coyote calling advanced concepts and tactics volume 1
cracking the ap chemistry exam 2006 2007 edition college test preparation
craftsman brush cutter user manual
cpt muscle advancement patella
cpne study guide
cr atures fantastiques paul rouillac

Featherweight 11 Sewing Machine Manual :

Social Studies Chapter 4, Lesson 3, Scott Foresman Spanish explorer who explored what is now Texas in 1528. Francisco Vásquez de Coronado. Spanish explorer of the American southwest; searched for the Cíbola ... Scott Foresman Texas Social Studies Grade 4 AudioText ... Professional recordings of the Pupil Edition aid in comprehension and help develop listening skills. Dramatic Readings of the "You Are THere" Passages allow ... scott foresman grade 5 chapter 4 social studies Flashcards A settlement ruled by another country. columbian extange. The movement of people, food, livestock, ... Texas enVision MATH 4 answers & resources Texas enVision MATH 4 grade 4 workbook & answers help online. Grade: 4, Title: Texas enVision MATH 4, Publisher: Scott Foresman-Addison Wesley, ... Scott foresman social studies grade 4 Scott Foresman Social Studies Regions Grade 4 Chapter 4. Created by ... Texas students use for U.S. History. Includes fill-in-the-blanks ... Scott Foresman-Addison Wesley enVisionMATH 4 Scott Foresman-Addison Wesley enVisionMATH 4 grade 4 workbook &

answers help online. Grade: 4, Title: Scott Foresman-Addison Wesley enVisionMATH 4, ... Scott Foresman Social Studies: Texas Edition This book is working great with my Texas TEKS curriculum and follows along well with my lesson plans. I would recommend it for home or public schooling... 4 ... Scott foresman social studies Scott Foresman Social Studies Grade 4 Chapter 4 Lesson 1 Study Guide ... Texas students use for U.S. History. Includes fill-in-the-blanks ... Reading Street 4 2 Grade by Scott Foresman Reading Street, Grade 2.2: Decodable Practice Readers Units 4-6 by Scott Foresman and a great selection of related books, art and collectibles available now ... Reading Street 4 2 Grade Unit by Scott Foresman Reading Street, Grade 2.2: Decodable Practice Readers Units 4-6 ... Houston, TX, U.S.A.. Seller Rating: 5-star rating. Used - Softcover Condition: Good. (b) MCD P5060.20 Mission. Per the references, inspections confirm adherence to the. Marine Corps Uniform Regulations and ensure Marines maintain the highest standards of uniform ... Uniform Inspection Jan 1, 2020 — This uniform inspection checklist may be used as a guide for all personally owned uniform items as detailed in MCO 10120.34H and MCBul 10120 ... Inspections and Templates This page contains a listing of safety Inspections and templates and safety points of contacts. Who knows where to find uniform inspection sheets? I'm looking for one for charlies but I can't find it on google images or PDFs, probably because these gov computers won't let me open some ... Uniform Inspections Sheets | PDF Utility Uniform. Marine: Date: Inspector: Discrepancies/comments. Marking Cover Fit/Serviceability Clean/Misc. Hair In Regulation. Shave/ In Regulation Dress Alpha Inspection sheet.doc - DRESS BLUE "A/B" ... View Dress Alpha Inspection sheet.doc from SCTY 420 at Embry-Riddle Aeronautical University. DRESS BLUE "A/B" UNIFORM INSPECTION CHECKLIST NAME_ RANK_ SQUAD ... Usmc Service C Uniform Inspection Checklist - Google Drive Each season or occasion prescribes a different uniform with its own set of guidelines that can be found in the Permanent Marine Corps Uniform Board. united states marine corps by S HANDOUT · 1999 — (1) The steps for preparing a unit for an inspection. (CPL 4.1a). (2) The references concerning Marine Corps uniforms. (CPL 4.1b). Marine Corps Uniform Inspection Checklist Oct 4, 2017 — The Marine Corps upholds a high standard for appearance. At all times, Marines must look neat, clean, and overall, professional. Uniform ... The Broadview Anthology of Short Fiction - Third Edition This selection of 45 stories, from Nathaniel Hawthorne to Shaun Tan, shows the range of short fiction in the past 150 years. This third edition includes ... The Broadview Anthology of Short Fiction This selection of 45 stories represents diverse narrative styles and a broad spectrum of human experience. Stories are organized chronologically, annotated, ... The Broadview Anthology of Short Fiction - Third Edition ... This selection of 45 stories, from Nathaniel Hawthorne to Shaun Tan, shows the range of short fiction in the past 150 years. This third edition includes. The Broadview Anthology of Short Fiction - Second Edition The collection comprises both recognized classics of the genre and some very interesting, less often anthologized works. Stories are organized chronologically, ... The Broadview Anthology of Short Fiction The Broadview Anthology of Short Fiction is a compact anthology that presents a wide range of exemplary works in a collection of elegant proportions. The Broadview Anthology of Short Fiction - Third Edition ...

The Broadview Anthology of Short Fiction - Third Edition (Paperback). By Sara Levine (Editor), Don Lepan (Editor), Marjorie Mather (Editor). $34.13. 9781554813834 | Broadview Anthology of Short May 1, 2020 — Rent textbook Broadview Anthology of Short Fiction – Fourth Canadian Edition by Laura Buzzard (Editor) - 9781554813834. Price: $11.87. The Broadview Anthology of Short Fiction - Third Edition ... The Broadview Anthology of Short Fiction - Third Edition (Paperback). By Sara Levine (Editor), Don Lepan (Editor), Marjorie Mather (Editor). $39.06. The Broadview Anthology of Short Fiction - Third Edition ... The Broadview Anthology of Short Fiction - Third Edition (Paperback) | Sandman Books | www.sandmanbooks.com/book/9781554811410. The Broadview Anthology of Short Fiction - Third Edition ... The Broadview Anthology of Short Fiction - Third Edition (Paperback). By Sara Levine (Editor), Don Lepan (Editor), Marjorie Mather (Editor) ...