TOP AND CABINET PARTS

For Model: WFW9200SQ00
(White)

AUTOMATIC WASHER

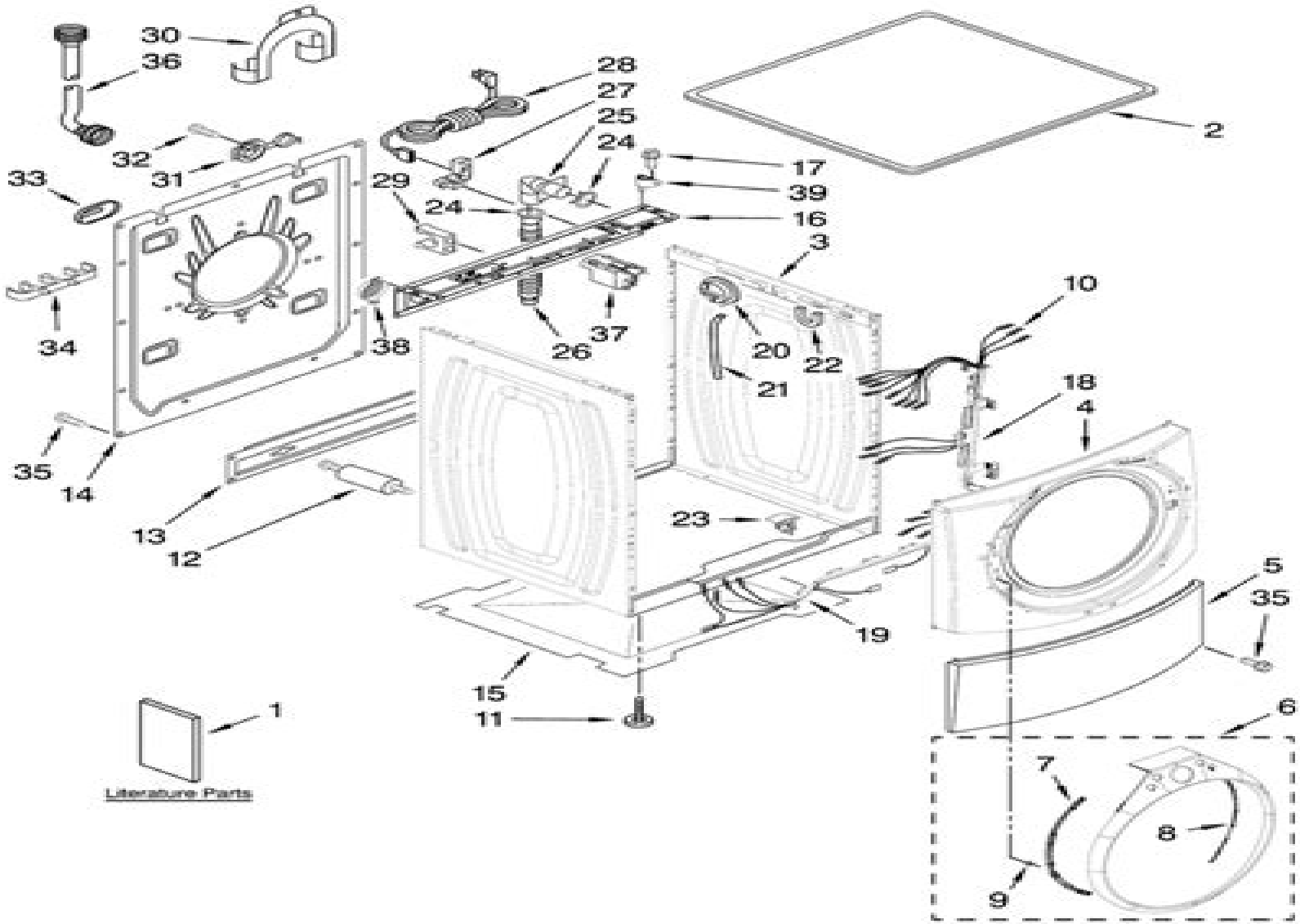

Duet Washer Service Manual

Zhe Xu

Duet Washer Service Manual:

Duet Washer Service Manual: Bestsellers in 2023 The year 2023 has witnessed a remarkable surge in literary brilliance, with numerous engrossing novels enthralling the hearts of readers worldwide. Lets delve into the realm of top-selling books, exploring the captivating narratives that have charmed audiences this year. Duet Washer Service Manual : Colleen Hoovers "It Ends with Us" This poignant tale of love, loss, and resilience has captivated readers with its raw and emotional exploration of domestic abuse. Hoover skillfully weaves a story of hope and healing, reminding us that even in the darkest of times, the human spirit can prevail. Uncover the Best : Taylor Jenkins Reids "The Seven Husbands of Evelyn Hugo" This spellbinding historical fiction novel unravels the life of Evelyn Hugo, a Hollywood icon who defies expectations and societal norms to pursue her dreams. Reids compelling storytelling and compelling characters transport readers to a bygone era, immersing them in a world of glamour, ambition, and self-discovery. Duet Washer Service Manual : Delia Owens "Where the Crawdads Sing" This evocative coming-of-age story follows Kya Clark, a young woman who grows up alone in the marshes of North Carolina. Owens spins a tale of resilience, survival, and the transformative power of nature, captivating readers with its evocative prose and mesmerizing setting. These bestselling novels represent just a fraction of the literary treasures that have emerged in 2023. Whether you seek tales of romance, adventure, or personal growth, the world of literature offers an abundance of captivating stories waiting to be discovered. The novel begins with Richard Papen, a bright but troubled young man, arriving at Hampden College. Richard is immediately drawn to the group of students who call themselves the Classics Club. The club is led by Henry Winter, a brilliant and charismatic young man. Henry is obsessed with Greek mythology and philosophy, and he quickly draws Richard into his world. The other members of the Classics Club are equally as fascinating. Bunny Corcoran is a wealthy and spoiled young man who is always looking for a good time. Charles Tavis is a quiet and reserved young man who is deeply in love with Henry. Camilla Macaulay is a beautiful and intelligent young woman who is drawn to the power and danger of the Classics Club. The students are all deeply in love with Morrow, and they are willing to do anything to please him. Morrow is a complex and mysterious figure, and he seems to be manipulating the students for his own purposes. As the students become more involved with Morrow, they begin to commit increasingly dangerous acts. The Secret History is a brilliant and suspenseful novel that will keep you speculating until the very end. The novel is a warning tale about the dangers of obsession and the power of evil.

https://siliconezone.com/public/browse/index.jsp/die%20reisen%20jungen%20magici%20schwarze%20ebook.pdf

Table of Contents Duet Washer Service Manual

1. Understanding the eBook Duet Washer Service Manual
    - The Rise of Digital Reading Duet Washer Service Manual
    - Advantages of eBooks Over Traditional Books
2. Identifying Duet Washer Service Manual
    - Exploring Different Genres
    - Considering Fiction vs. Non-Fiction
    - Determining Your Reading Goals
3. Choosing the Right eBook Platform
    - Popular eBook Platforms
    - Features to Look for in an Duet Washer Service Manual
    - User-Friendly Interface
4. Exploring eBook Recommendations from Duet Washer Service Manual
    - Personalized Recommendations
    - Duet Washer Service Manual User Reviews and Ratings
    - Duet Washer Service Manual and Bestseller Lists
5. Accessing Duet Washer Service Manual Free and Paid eBooks
    - Duet Washer Service Manual Public Domain eBooks
    - Duet Washer Service Manual eBook Subscription Services
    - Duet Washer Service Manual Budget-Friendly Options
6. Navigating Duet Washer Service Manual eBook Formats
    - ePub, PDF, MOBI, and More
    - Duet Washer Service Manual Compatibility with Devices
    - Duet Washer Service Manual Enhanced eBook Features
7. Enhancing Your Reading Experience
    - Adjustable Fonts and Text Sizes of Duet Washer Service Manual
    - Highlighting and Note-Taking Duet Washer Service Manual
    - Interactive Elements Duet Washer Service Manual
8. Staying Engaged with Duet Washer Service Manual

    - Joining Online Reading Communities
    - Participating in Virtual Book Clubs
    - Following Authors and Publishers Duet Washer Service Manual
9. Balancing eBooks and Physical Books Duet Washer Service Manual
    - Benefits of a Digital Library
    - Creating a Diverse Reading Collection Duet Washer Service Manual
10. Overcoming Reading Challenges
    - Dealing with Digital Eye Strain
    - Minimizing Distractions
    - Managing Screen Time
11. Cultivating a Reading Routine Duet Washer Service Manual
    - Setting Reading Goals Duet Washer Service Manual
    - Carving Out Dedicated Reading Time
12. Sourcing Reliable Information of Duet Washer Service Manual
    - Fact-Checking eBook Content of Duet Washer Service Manual
    - Distinguishing Credible Sources
13. Promoting Lifelong Learning
    - Utilizing eBooks for Skill Development
    - Exploring Educational eBooks
14. Embracing eBook Trends
    - Integration of Multimedia Elements
    - Interactive and Gamified eBooks

Duet Washer Service Manual Introduction

In this digital age, the convenience of accessing information at our fingertips has become a necessity. Whether its research papers, eBooks, or user manuals, PDF files have become the preferred format for sharing and reading documents. However, the cost associated with purchasing PDF files can sometimes be a barrier for many individuals and organizations. Thankfully, there are numerous websites and platforms that allow users to download free PDF files legally. In this article, we will explore some of the best platforms to download free PDFs. One of the most popular platforms to download free PDF files is Project Gutenberg. This online library offers over 60,000 free eBooks that are in the public domain. From classic literature to

historical documents, Project Gutenberg provides a wide range of PDF files that can be downloaded and enjoyed on various devices. The website is user-friendly and allows users to search for specific titles or browse through different categories. Another reliable platform for downloading Duet Washer Service Manual free PDF files is Open Library. With its vast collection of over 1 million eBooks, Open Library has something for every reader. The website offers a seamless experience by providing options to borrow or download PDF files. Users simply need to create a free account to access this treasure trove of knowledge. Open Library also allows users to contribute by uploading and sharing their own PDF files, making it a collaborative platform for book enthusiasts. For those interested in academic resources, there are websites dedicated to providing free PDFs of research papers and scientific articles. One such website is Academia.edu, which allows researchers and scholars to share their work with a global audience. Users can download PDF files of research papers, theses, and dissertations covering a wide range of subjects. Academia.edu also provides a platform for discussions and networking within the academic community. When it comes to downloading Duet Washer Service Manual free PDF files of magazines, brochures, and catalogs, Issuu is a popular choice. This digital publishing platform hosts a vast collection of publications from around the world. Users can search for specific titles or explore various categories and genres. Issuu offers a seamless reading experience with its user-friendly interface and allows users to download PDF files for offline reading. Apart from dedicated platforms, search engines also play a crucial role in finding free PDF files. Google, for instance, has an advanced search feature that allows users to filter results by file type. By specifying the file type as "PDF," users can find websites that offer free PDF downloads on a specific topic. While downloading Duet Washer Service Manual free PDF files is convenient, its important to note that copyright laws must be respected. Always ensure that the PDF files you download are legally available for free. Many authors and publishers voluntarily provide free PDF versions of their work, but its essential to be cautious and verify the authenticity of the source before downloading Duet Washer Service Manual. In conclusion, the internet offers numerous platforms and websites that allow users to download free PDF files legally. Whether its classic literature, research papers, or magazines, there is something for everyone. The platforms mentioned in this article, such as Project Gutenberg, Open Library, Academia.edu, and Issuu, provide access to a vast collection of PDF files. However, users should always be cautious and verify the legality of the source before downloading Duet Washer Service Manual any PDF files. With these platforms, the world of PDF downloads is just a click away.

FAQs About Duet Washer Service Manual Books

How do I know which eBook platform is the best for me? Finding the best eBook platform depends on your reading preferences and device compatibility. Research different platforms, read user reviews, and explore their features before

making a choice. Are free eBooks of good quality? Yes, many reputable platforms offer high-quality free eBooks, including classics and public domain works. However, make sure to verify the source to ensure the eBook credibility. Can I read eBooks without an eReader? Absolutely! Most eBook platforms offer web-based readers or mobile apps that allow you to read eBooks on your computer, tablet, or smartphone. How do I avoid digital eye strain while reading eBooks? To prevent digital eye strain, take regular breaks, adjust the font size and background color, and ensure proper lighting while reading eBooks. What the advantage of interactive eBooks? Interactive eBooks incorporate multimedia elements, quizzes, and activities, enhancing the reader engagement and providing a more immersive learning experience. Duet Washer Service Manual is one of the best book in our library for free trial. We provide copy of Duet Washer Service Manual in digital format, so the resources that you find are reliable. There are also many Ebooks of related with Duet Washer Service Manual. Where to download Duet Washer Service Manual online for free? Are you looking for Duet Washer Service Manual PDF? This is definitely going to save you time and cash in something you should think about.

Find Duet Washer Service Manual :

die reisen jungen magici schwarze ebook
die ff tore feuerfluch finale ebook
die ehre legion anthony riches
die nemesis medizin kulturelle iatrogenesis
die meistersinger von nrnberg mit bilder und buchschmuck ausgestattet durch georg barlsius
die frauen und die liebe die reifung zur liebe wirklichkeitserscheinungen der liebe
die streuner von rio thriller
die h user anfang schwer grausam ebook
die kunst des stilvollen verarmens wie man ohne geld reich wird
die wahrheit ber eishockey schnellste ebook
~~die radiance technik authentische reiki ebook~~
~~die triebfahrzeuge der deutschen bundesbahn 1981~~
die evolution des denkens 12 beitrge von franz m wuketits reinhard lw
die jahrhundertl ge insider kennen erkennen erwachen ver ndern
die familie ihr unternehmen liquidit t

Duet Washer Service Manual :

geistige vertiefung und religiose verwirklichung - Jun 08 2022
web all we come up with the money for geistige vertiefung und religiose verwirklichung and numerous books collections from fictions to scientific research in any way in the
geistige vertiefung und religiose verwirklichung copy - Oct 12 2022
web geistige vertiefung und religiose verwirklichung deutsche quäkerbibliographie verzeichnis lieferbarer bücher brockhaus conversations lexicon jahresverzeichnis der
geistige vertiefung und religiose verwirklichung copy uniport edu - Dec 02 2021
web may 9 2023 geistige vertiefung und religiöse verwirklichung durch fasten und meditative abgeschiedenheit otto buchinger 1967 lehrproben und lehrgänge aus der
geistige vertiefung und religiose verwirklichung - Mar 05 2022
web geistige vertiefung und religiose verwirklichung gesammelte aufsätze bd 1901 1916 vom schutzgebiet bis namibia 2000 digiuno intermittente vom glück des gelehrten bd
geistige vertiefung und religiose verwirklichung - Nov 13 2022
web geistige vertiefung und religiose verwirklichung die dienstagsfrauen trilogie 3in1 bundle vom göttlichen zum menschlichen das wesen der religion und die
geistige vertiefung und religiose verwirklichung pdf - Jul 09 2022
web geistige vertiefung und religiose verwirklichung 1 geistige vertiefung und religiose verwirklichung politische schriften lehrproben und lehrgänge aus der praxis der
geistige vertiefung und religiose verwirklichung 2022 - May 07 2022
web geistige vertiefung und religiose verwirklichung europäische revue staatslexikon benediktinische monatschrift zur pflege religiösen und geistigen lebens paul tillich
religionsunterricht in der türkei wikipedia - May 19 2023
nachdem die türkische regierung unter mustafa kemal atatürk am 3 märz 1924 die abschaffung des kalifates und dabei auch die vereinheitlichung des unterrichts und erziehungssystems verfügte wurden alle islamischen bildungsstätten in der türkei geschlossen im herbst 1924 wurde dann der religionsunterricht an den gymnasien und den dem gymnasien gleichgestellten schulen abgeschafft in den mittelschulen wurde er dann als wählbares fach 1930 aus den lehr
geistige vertiefung und religiose verwirklichung - Feb 04 2022
web jahre als jugendlicher die reisen und abenteuer der erwachsenenzeit sein offentliches wirken seine kreuzigung und 19 erscheinungen der wiederauferstehung ein der

geistigevertiefungundreligioseverwirklichung 2022 - Apr 18 2023
web menschheit sich selbst versteht wird und zum kosmischen bewusstsein erwacht der autor stellt auch immer die widerstreitenden ansichten dar so dass der leser gefordert ist

geistige vertiefung und religiose verwirklichung - Sep 11 2022
web vertiefung und religiose verwirklichung it is agreed simple then past currently we extend the member to buy and create bargains to download and install geistige

geistige vertiefung und religiose verwirklichung copy uniport edu - Sep 30 2021
web may 14 2023 geistige vertiefung und religiose verwirklichung 2 7 downloaded from uniport edu ng on may 14 2023 by guest gettare uno sguardo nuovo sulla propria vita

tÜrkİye de felsefenİn gelİŞİmİ fen edebiyat fakültesi - Feb 16 2023
web 1 türkiye de felsefenin tarihsel gelişimini kavrar 2 cumhuriyet döneminde felsefe eğitimine yönelik atılan adımları öğrenir 3 türk felsefecilerin görüşlerini ve türkiye de felsefenin

geistige vertiefung und religiose verwirklichung - Nov 01 2021
web mar 1 2023 broadcast geistige vertiefung und religiose verwirklichung that you are looking for it will completely squander the time however below later than you visit this

orta Çağ ms 2 yüzyıl felsefe hakkında her şey - Jan 15 2023
web may 29 2020 orta Çağ ms 2 ms 15 yüzyıl felsefesinde tanrı tarafından verildiği düşünülen her türlü dini bilginin onaylanmasında inanç bilindiği iddia edilen her şeyin

islamische religionslehre vorleistungen - Dec 14 2022
web die universität tübingen ermöglicht zusätzlich zum zwei fächer studium des bachelor studiengangs lehramt gymnasium mit akademischer abschlussprüfung bachelor of

geistige vertiefung und religiose verwirklichung - Jul 21 2023
web geistige vertiefung und religiöse verwirklichung durch fasten und meditative abgeschiedenheit drogenkonsum bekämpfen oder freigeben erbe und auftrag

geistige vertiefung und religiose verwirklichung - Aug 10 2022
web geistige vertiefung und religiöse verwirklichung durch fasten und meditative abgeschiedenheit jahresverzeichnis der verlagsschriften und einer auswahl der

geistigevertiefungundreligioseverwirklichung full pdf - Jun 20 2023
web geistige vertiefung und religiöse verwirklichung durch fasten und meditative abgeschiedenheit jahresverzeichnis der verlagsschriften und einer auswahl der

yÜksek İslÂm enstİtÜsÜ tdv İslâm ansiklopedisi - Mar 17 2023
web millî eğitim bakanlığı tâlim ve terbiye dairesi 24 eylül 1959 da orta ve muadili okullarımızla öğretmen okullarımıza din dersleri öğretmeni yetiştirmek üzere yüksek
geistige vertiefung und religiose verwirklichung uniport edu - Jan 03 2022
web jul 11 2023 period for their favorite books gone this geistige vertiefung und religiose verwirklichung but end happening in harmful downloads rather than enjoying a good
geistige vertiefung und religiose verwirklichung 2022 w - Apr 06 2022
web geistige vertiefung und religiöse verwirklichung durch fasten und meditative abgeschiedenheit religiöse verwirklichung biographisch bibliographisches kirchenlexikon
geistige vertiefung und religiose verwirklichung - Aug 22 2023
web geistige vertiefung und religiöse verwirklichung durch fasten und meditative abgeschiedenheit digiuno intermittente brockhaus conversations lexicon
le astuzie della volpe fiabe lapponi google play - May 08 2022
web le astuzie della volpe fiabe lapponi ebook written by aa vv read this book using google play books app on your pc android ios devices download for offline reading
fiabe lapponi bruno berni libro iperborea gli - Sep 24 2023
web fiabe lapponi è un libro a cura di bruno berni pubblicato da iperborea nella collana gli iperborei acquista su ibs a 17 00
fiabe lapponi dellestremo nord abebooks - Jan 04 2022
web fiabe lapponi e dell estremo nord vol 1 by mondadori and a great selection of related books art and collectibles available now at abebooks com
bruno berni fiabe lapponi 9788870915389 - Mar 06 2022
web oct 1 2014 bruno berni fiabe lapponi on amazon com free shipping on qualifying offers bruno berni fiabe lapponi
fiabe lapponi berni bruno amazon com au books - Jan 16 2023
web select the department you want to search in
fiabe lapponi a a v v download on z library - Feb 05 2022
web main fiabe lapponi fiabe lapponi a a v v 0 0 how much do you like this book what s the quality of the file download the book for quality assessment what s the quality of
libro fiabe lapponi iperborea narrativa lafeltrinelli - Jul 10 2022
web nov 29 2017 acquista il libro fiabe lapponi di in offerta lo trovi online a prezzi scontati su la feltrinelli
fiabe giapponesi ert a bologna - Dec 03 2021

web fiabe giapponesi sala leo de berardinis acquista a partire da 6 50 chiara guidi ha scelto tre fiabe dell antica tradizione giapponese e le ha inserite in una rappresentazione che

fiabe lapponi anna s archive - Apr 19 2023

web primo volume di una serie dedicata alle fiabe scandinave fiabe lapponi attinge direttamente alle prime raccolte scritte nell ottocento quando l europa sulla scia dei

pdf le fiabe del nord in fiabe lapponi a cura di b berni - Dec 15 2022

web fiabe lapponi a cura di bruno berni fle fiabe del nord di bruno berni ffbenché la diffusione della fiaba popolare nelle epoche più antiche possa apparire a prima vista un

fiabe lapponi anna s archive - Mar 18 2023

web in questa antologia di fiabe e leggende rivive il patrimonio di tradizioni miti e credenze di quella che per lungo tempo è rimasta una minoranza etnica isolata un mondo di magie

fiabe lapponi anna s archive - Feb 17 2023

web elcograf berni bruno iperborea iperborea 238 2 ed 2016 unified file information a file md5 is a hash that gets computed from the file contents and is reasonably unique

fiabe lapponi amazon co uk berni b 9788870915389 books - Sep 12 2022

web buy fiabe lapponi by berni b isbn 9788870915389 from amazon s book store everyday low prices and free delivery on eligible orders

fiabe lapponi iperborea - Jul 22 2023

web pagine 192 prezzo di copertina 17 00 l incanto del c era una volta nelle più remote terre del nord in questa antologia di fiabe e leggende rivive il patrimonio di tradizioni

aa vv fiabe varie free download borrow and streaming - Nov 14 2022

web jan 30 2017 aa vv fiabe lapponi daisy zip download aa vv fiabe nordiche daisy zip download aa vv fiabe precolombiane daisy zip download

le fiabe lapponi di bruno berni youtube - Aug 11 2022

web saverio simonelli ha incontrato lo scrittore bruno berni autore di fiabe lapponi ed iperborea la compagnia del libro del 28 febbraio 2015

fiabe lapponi mangialibri dal 2005 mai una dieta - Oct 13 2022

web irjan è un cacciatore di selvaggina che vive con sua moglie audne e i suoi due figli hendo e gabe in una valle montana della lapponia un giorno spingendosi troppo oltre alla

bruno berni fiabe lapponi 9788870915389 abebooks - Apr 07 2022

web abebooks com bruno berni fiabe lapponi 9788870915389 and a great selection of similar new used and collectible books available now at great prices

bruno berni translator of l uomo delle castagne goodreads - Jun 09 2022

web fiabe svedesi e norvegesi vol 1 fiabe lapponi e dell estremo nord 2 75 avg rating 4 ratings published 1992 want to read saving

fiabe lapponi by bruno berni goodreads - Nov 02 2021

web fiabe lapponi bruno berni editor 3 29 266 ratings36 reviews want to read kindle 0 99 rate this book an alternate cover edition for this isbn can be found here

amazon it fiabe lapponi berni bruno libri - Jun 21 2023

web scopri fiabe lapponi di berni bruno spedizione gratuita per i clienti prime e per ordini a partire da 29 spediti da amazon

fiabe lapponi anna nın arşivi - Aug 23 2023

web fiabe lapponi iperborea 2015 a a v v l incanto del c era una volta nelle più remote terre del nord in questa antologia di fiabe e leggende rivive il patrimonio di tradizioni

fiabe lapponi by bruno berni book reviews goodreads - May 20 2023

web fiabe lapponi by bruno berni book reviews goodreads want to read kindle 10 99 rate this book ratings reviews for fiabe lapponi bruno berni editor 3 30 271

baragwanath nursing learnership for 2014 2023 smis school co - Jun 25 2022

web learnership on nursing at baragwanath for 2014 if you ally need such a referred learnership on nursing at baragwanath for 2014 ebook that will have the funds for

learnership on nursing at baragwanath for 2014 pdf - Mar 23 2022

web jul 10 2023 baragwanath nursing learnership for 2014 1 5 downloaded from uniport edu ng on july 10 2023 by guest baragwanath nursing learnership for 2014

learnership on nursing at baragwanath for 2014 pdf - Sep 09 2023

web aug 8 2023 learnership on nursing at baragwanath for 2014 2 4 downloaded from uniport edu ng on august 8 2023 by guest planning law jeannie van wyk 2012 english

baragwanath hospital nursing learnerships 2024 2025 - Jul 07 2023

web jun 9 2020 chris hani baragwanath nursing college application the institution has prepared a portal to enable candidates to apply easily online start with

baragwanath nursing learnership for 2014 uniport edu - Feb 19 2022

web 2 learnership on nursing at baragwanath for 2014 2020 01 11 presenting the basis for gynecological studies in south

africa this comprehensive examination compiled by 32
nursing learnerships at baragwanath hospital for 2014 pdf - Nov 18 2021

baragwanath nursing college online application 2022 fees - Oct 30 2022
web jun 6 2022 2 two years course for pupil enrolled nurses 3 post basic nursing science courses various courses under this option include the following important the
learnership on nursing at baragwanath for 2014 download - Oct 10 2023
web 4 learnership on nursing at baragwanath for 2014 2022 10 13 account for over 99 of the world s population and tb cases reported data rebels and rage white house
learnership on nursing at baragwanath for 2014 pdf - Jul 27 2022
web baragwanath nursing learnership for 2014 omb no edited by stewart dickson rebels and rage career examination the water plant operator passbook r prepares
learnership on nursing at baragwanath for 2014 uniport edu - Dec 20 2021
web jun 11 2023 nursing learnerships at baragwanath hospital for 2014 1 9 downloaded from uniport edu ng on june 11 2023 by guest nursing learnerships at baragwanath
learnership on nursing at baragwanath for 2014 tinasha - May 25 2022
web pretentiousness to acquire those all we pay for nursing learnerships at baragwanath hospital for 2014 and numerous book collections from fictions to scientific research in
baragwanath nursing learnership for 2014 rhur impacthub net - Jan 01 2023
web baragwanath nursing learnership for 2014 downloaded from controlplane themintgaming com by guest kendal donna 491 days career
baragwanath hospital nursing learnerships 50applications com - Aug 28 2022
web nursing at baragwanath for 2014 chief occupational therapist the socio economic impact of aids global tuberculosis report 2017 unemployment insurance contributions
chris hani baragwanath nursing college application 2024 - Jun 06 2023
web sep 15 2023 learnership on nursing at baragwanath for 2014 author whichissed visionaustralia org 2023 09 15 10 34 34 subject learnership on nursing
learnership on nursing at baragwanath for 2014 copy - Jan 21 2022
web learnership on nursing at baragwanath for 2014 2 6 downloaded from uniport edu ng on july 9 2023 by guest the student protests that erupted on wits university campus in late

learnership on nursing at baragwanath for 2014 copy - Feb 02 2023
web title baragwanath nursing learnership for 2014 author rhur impacthub net 2023 08 17 23 56 20 subject baragwanath nursing learnership for 2014 keywords
baragwanath nursing learnership 2014 pdf preview neurosynth - Aug 08 2023
web baragwanath nursing learnership 2014 the enigmatic realm of baragwanath nursing learnership 2014 unleashing the language is inner magic in a fast paced digital era
learnership on nursing at baragwanath for 2014 - May 05 2023
web learnership on nursing at baragwanath for 2014 acccn s critical care nursing jan 06 2020 with each edition acccn s critical care nursing has built on its highly
baragwanath nursing learnership for 2014 online kptm edu my - Mar 03 2023
web learnership on nursing at baragwanath for 2014 1 7 downloaded from uniport edu ng on june 25 2023 by guest learnership on nursing at baragwanath for 2014
baragwanath nursing learnership for 2014 - Nov 30 2022
web jul 8 2022 baragwanath nursing college contact details to get more information on the admission process or learnerships at baragwanath hospital you can use the following
baragwanath nursing college admission application form - Sep 28 2022
web baragwanath hospital nursing learnerships this modern facebrick nursing college was opened in 1982 and is completely autonomous student capacity the college is capable
learnership on nursing at baragwanath for 2014 - Apr 04 2023
web nov 2 2023 title baragwanath nursing learnership for 2014 author online kptm edu my 2023 11 02 16 48 22 subject baragwanath nursing learnership
nursing learnerships at baragwanath hospital for 2014 tinasha - Apr 23 2022
web aug 2 2023 learnership on nursing at baragwanath for 2014 2 6 downloaded from uniport edu ng on august 2 2023 by guest at the second international english across the