Cummins Parts Catalog

6CTA8.3 F1, F2, F3

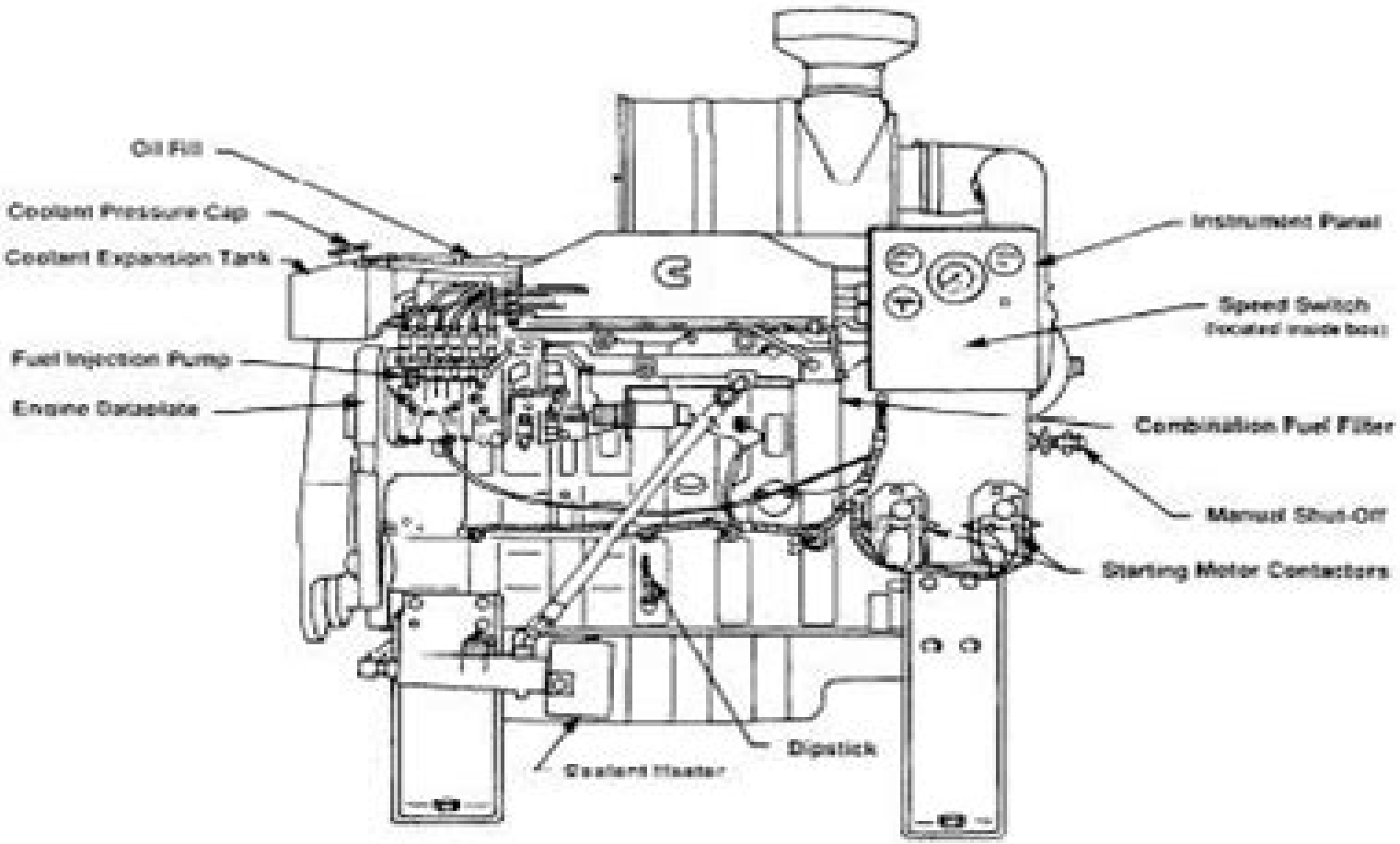

Cummins 6cta8 Service Manual

Huangqi Zhang

Cummins 6cta8 Service Manual:

Embark on a transformative journey with Written by is captivating work, **Cummins 6cta8 Service Manual** . This enlightening ebook, available for download in a convenient PDF format , invites you to explore a world of boundless knowledge. Unleash your intellectual curiosity and discover the power of words as you dive into this riveting creation. Download now and elevate your reading experience to new heights .

https://siliconezone.com/files/Resources/index.jsp/Fuel%20Filter%20For%202001%20Audi%20A6%202%207t.pdf

Table of Contents Cummins 6cta8 Service Manual

1. Understanding the eBook Cummins 6cta8 Service Manual
    - The Rise of Digital Reading Cummins 6cta8 Service Manual
    - Advantages of eBooks Over Traditional Books
2. Identifying Cummins 6cta8 Service Manual
    - Exploring Different Genres
    - Considering Fiction vs. Non-Fiction
    - Determining Your Reading Goals
3. Choosing the Right eBook Platform
    - Popular eBook Platforms
    - Features to Look for in an Cummins 6cta8 Service Manual
    - User-Friendly Interface
4. Exploring eBook Recommendations from Cummins 6cta8 Service Manual
    - Personalized Recommendations
    - Cummins 6cta8 Service Manual User Reviews and Ratings
    - Cummins 6cta8 Service Manual and Bestseller Lists
5. Accessing Cummins 6cta8 Service Manual Free and Paid eBooks
    - Cummins 6cta8 Service Manual Public Domain eBooks
    - Cummins 6cta8 Service Manual eBook Subscription Services
    - Cummins 6cta8 Service Manual Budget-Friendly Options

6. Navigating Cummins 6cta8 Service Manual eBook Formats
    - ePub, PDF, MOBI, and More
    - Cummins 6cta8 Service Manual Compatibility with Devices
    - Cummins 6cta8 Service Manual Enhanced eBook Features
7. Enhancing Your Reading Experience
    - Adjustable Fonts and Text Sizes of Cummins 6cta8 Service Manual
    - Highlighting and Note-Taking Cummins 6cta8 Service Manual
    - Interactive Elements Cummins 6cta8 Service Manual
8. Staying Engaged with Cummins 6cta8 Service Manual
    - Joining Online Reading Communities
    - Participating in Virtual Book Clubs
    - Following Authors and Publishers Cummins 6cta8 Service Manual
9. Balancing eBooks and Physical Books Cummins 6cta8 Service Manual
    - Benefits of a Digital Library
    - Creating a Diverse Reading Collection Cummins 6cta8 Service Manual
10. Overcoming Reading Challenges
    - Dealing with Digital Eye Strain
    - Minimizing Distractions
    - Managing Screen Time
11. Cultivating a Reading Routine Cummins 6cta8 Service Manual
    - Setting Reading Goals Cummins 6cta8 Service Manual
    - Carving Out Dedicated Reading Time
12. Sourcing Reliable Information of Cummins 6cta8 Service Manual
    - Fact-Checking eBook Content of Cummins 6cta8 Service Manual
    - Distinguishing Credible Sources
13. Promoting Lifelong Learning
    - Utilizing eBooks for Skill Development
    - Exploring Educational eBooks
14. Embracing eBook Trends
    - Integration of Multimedia Elements

- Interactive and Gamified eBooks

Cummins 6cta8 Service Manual Introduction

In this digital age, the convenience of accessing information at our fingertips has become a necessity. Whether its research papers, eBooks, or user manuals, PDF files have become the preferred format for sharing and reading documents. However, the cost associated with purchasing PDF files can sometimes be a barrier for many individuals and organizations. Thankfully, there are numerous websites and platforms that allow users to download free PDF files legally. In this article, we will explore some of the best platforms to download free PDFs. One of the most popular platforms to download free PDF files is Project Gutenberg. This online library offers over 60,000 free eBooks that are in the public domain. From classic literature to historical documents, Project Gutenberg provides a wide range of PDF files that can be downloaded and enjoyed on various devices. The website is user-friendly and allows users to search for specific titles or browse through different categories. Another reliable platform for downloading Cummins 6cta8 Service Manual free PDF files is Open Library. With its vast collection of over 1 million eBooks, Open Library has something for every reader. The website offers a seamless experience by providing options to borrow or download PDF files. Users simply need to create a free account to access this treasure trove of knowledge. Open Library also allows users to contribute by uploading and sharing their own PDF files, making it a collaborative platform for book enthusiasts. For those interested in academic resources, there are websites dedicated to providing free PDFs of research papers and scientific articles. One such website is Academia.edu, which allows researchers and scholars to share their work with a global audience. Users can download PDF files of research papers, theses, and dissertations covering a wide range of subjects. Academia.edu also provides a platform for discussions and networking within the academic community. When it comes to downloading Cummins 6cta8 Service Manual free PDF files of magazines, brochures, and catalogs, Issuu is a popular choice. This digital publishing platform hosts a vast collection of publications from around the world. Users can search for specific titles or explore various categories and genres. Issuu offers a seamless reading experience with its user-friendly interface and allows users to download PDF files for offline reading. Apart from dedicated platforms, search engines also play a crucial role in finding free PDF files. Google, for instance, has an advanced search feature that allows users to filter results by file type. By specifying the file type as "PDF," users can find websites that offer free PDF downloads on a specific topic. While downloading Cummins 6cta8 Service Manual free PDF files is convenient, its important to note that copyright laws must be respected. Always ensure that the PDF files you download are legally available for free. Many authors and publishers voluntarily provide free PDF versions of their work, but its essential to be cautious and verify the authenticity of the source before downloading Cummins 6cta8 Service Manual. In conclusion, the internet offers numerous platforms and websites that allow users to download free PDF files legally. Whether its classic

literature, research papers, or magazines, there is something for everyone. The platforms mentioned in this article, such as Project Gutenberg, Open Library, Academia.edu, and Issuu, provide access to a vast collection of PDF files. However, users should always be cautious and verify the legality of the source before downloading Cummins 6cta8 Service Manual any PDF files. With these platforms, the world of PDF downloads is just a click away.

FAQs About Cummins 6cta8 Service Manual Books

How do I know which eBook platform is the best for me? Finding the best eBook platform depends on your reading preferences and device compatibility. Research different platforms, read user reviews, and explore their features before making a choice. Are free eBooks of good quality? Yes, many reputable platforms offer high-quality free eBooks, including classics and public domain works. However, make sure to verify the source to ensure the eBook credibility. Can I read eBooks without an eReader? Absolutely! Most eBook platforms offer web-based readers or mobile apps that allow you to read eBooks on your computer, tablet, or smartphone. How do I avoid digital eye strain while reading eBooks? To prevent digital eye strain, take regular breaks, adjust the font size and background color, and ensure proper lighting while reading eBooks. What the advantage of interactive eBooks? Interactive eBooks incorporate multimedia elements, quizzes, and activities, enhancing the reader engagement and providing a more immersive learning experience. Cummins 6cta8 Service Manual is one of the best book in our library for free trial. We provide copy of Cummins 6cta8 Service Manual in digital format, so the resources that you find are reliable. There are also many Ebooks of related with Cummins 6cta8 Service Manual. Where to download Cummins 6cta8 Service Manual online for free? Are you looking for Cummins 6cta8 Service Manual PDF? This is definitely going to save you time and cash in something you should think about.

Find Cummins 6cta8 Service Manual :

fuel filter for 2001 audi a6 2 7t
fuji controller manual
~~fujifilm finepix 6800 zoom complete service repair manual~~
~~from state to market from state to market~~
frontman workshop manual
frommers california 2009 frommers complete guides
frommers jamaica and barbados 4th ed

from sunderland to pittington
from patent to profit secrets & strategies for the successful inventor
frommers san antonio and austin frommers complete guides
~~ft bliss holiday calendar fy 2014~~
frp reinforced concrete shear abaqus
fuel pump zd 30 engine service manual
from obstacle to ally the evolution of psychoanalytic practice
fsica cuntica para filo sofos 0 colec la ciencia para todos spanish edition

Cummins 6cta8 Service Manual :

prediction modeling methodology springerlink - Oct 08 2022
you learn to use logistic regression to model an individual s behavior as a function of known inputs create effect plots and odds ratio plots handle missing data values and tackle
recognition of refractory mycoplasma pneumoniae pneumonia - Jun 23 2021
oct 10 2023 others were inputted as the average values or modes for the variables in the multivariable analysis of the derivation set all variables that were predictors of aki were
intelligent identification system of gastric stromal tumors based on - Aug 26 2021
jul 8 2021 for logistic regression we need independent variables for assessment and otherwise the regression model tends to over weigh of the dependent attributes in the future
logistic regression using sas indepth predictive modeling - Jan 31 2022
logistic regression is a predictive modelling algorithm that is used when the y variable is binary categorical that is it can take only two values like 1 or 0 the goal is to determine a
predictive modeling with logistic regression using sas - Jan 11 2023
this type of statistical model also known as logit model is often used for classification and predictive analytics logistic regression estimates the probability of an event occurring
logistic regression model an overview sciencedirect topics - Aug 06 2022
mar 29 2023 logistic regression models with two parameter variables and five parameter variables are established respectively 5 two logistic regression models were used to
predictive modeling using logistic regression sas - Apr 14 2023
you learn to use logistic regression to model an individual s behavior as a function of known inputs create effect plots and

odds ratio plots handle missing data values and tackle

predictive modeling with logistic regression using sas - Aug 18 2023

let us say we want to predict likelihood of a candidate to pass the math s olympiad for class x using ordinary linear regression will not work in this scenario because it doesn t see more

predictive modelling using logistic regression medium - Sep 19 2023

regression allows us to predict an output based on some input parameters for instance we can predict someone s height based on their parents height and age this type of regression is called linear regression because the outcome variable is a continuous real number but what if we wanted to predict see more

analysis and prediction of older adult sports participation in south - Jul 25 2021

oct 17 2023 the shapley additive explanation shap method was used to evaluate the contributions of variables results machine learning models outperformed logistic

development of a clinical automatic calculation of hypoglycemia - Dec 30 2021

jan 1 2022 regression models can be used as a predictive model popular regression models include linear regression logistic regression principal component regression and

prediction of acute kidney injury following coronary artery bypass - Sep 26 2021

oct 13 2023 logistic regression prediction model construction binary logistic regression analysis was performed with the occurrence of hypoglycemia during hemodialysis as the

predictive parameters in a logistic regression making sense of - Sep 07 2022

this class implements regularized logistic regression using the liblinear library newton cg sag saga and lbfgs solvers note that regularization is applied by default

frontiers predicting short term outcomes in atrial fibrillation - Oct 28 2021

this course is all about credit scoring logistic regression model building using sas it explains there course promises to explain concepts in a crystal clear manner it goes through the

quora a place to share knowledge and better understand the world - Apr 21 2021

oct 19 2023 a sample comprising data on 1 770 older adults aged 50 years and above was drawn from the 2019 national sports survey the data were analyzed through frequency

how to use predict with logistic regression model in r - Jul 05 2022

dec 22 2018 in this chapter you will learn how to make a predictive model using very common regression techniques and how to evaluate the performance of a model in the next

a dynamic online nomogram for predicting death in hospital after - Mar 01 2022

apr 27 2023 logistic regression is a statistical model used to analyze and predict binary outcomes it s commonly used in finance marketing healthcare and social sciences to model

what is logistic regression ibm - May 15 2023

in logistic regression we model for log of the odds ratio which is the log p 1 p where p is the probability of the event occurring and 1 p is see more

logistic regression wikipedia - Feb 12 2023

this course covers predictive modeling using sas stat software with emphasis on the logistic procedure this course also discusses selecting variables and interactions

sklearn linear model logisticregression scikit learn 1 3 1 - Dec 10 2022

this course covers predictive model ing using sas stat software with emphasis on the logistic procedure this course also discusses selecting variables assessing models

developing prediction models for clinical use using logistic - Mar 21 2021

oct 10 2023 a prediction nomogram was constructed from all variables significantly associated with rmpp risk p 0 05 in the multivariate analysis using stepwise logistic regression

developing prediction models for clinical use using - Jul 17 2023

before getting into the details of logistic regression let us define something called odds of an event suppose p is the probability of an event occurring the event could be see more

logistic regression a complete tutorial with examples in r - May 03 2022

logistic is an alternative implementation for building and using a multinomial logistic regression model with a ridge estimator to guard against overfitting by penalizing large

logistic regression prediction models and key influencing - Nov 09 2022

jan 25 2019 we describe a set of guidelines and heuristics for clinicians to use to develop a logistic regression based prediction model for binary outcomes that is intended to augment

building an end to end logistic regression model analytics - Jun 04 2022

jun 13 2022 1 l ogistic regressions also referred to as a logit models are powerful alternatives to linear regressions that allow one to model a dichotomous binary outcome

predictive models using regression springerlink - Apr 02 2022

apr 4 2023 object the name of the logistic regression model newdata the name of the new data frame to make predictions for type the type of prediction to make the following

course predictive modeling using logistic regression - Jun 16 2023

let us discuss an application of logistic regression in the telecom industry an analyst at a telecom company wants to predict the probability of customer churn the target variable is customer churn where zero see more

developing prediction models for clinical use using logistic - Mar 13 2023

jan 25 2019 we describe a set of guidelines and heuristics for clinicians to use to develop a logistic regression based prediction model for binary outcomes that is intended to augment

what is predictive logistics modeling 5 core basics enveyo - May 23 2021

oct 13 2023 in this study three algorithms gradient boosting machine gbm random forest rf and logistic regression lr were chosen to build gst prediction models for

predictive loan approval model using logistic regression - Nov 28 2021

oct 12 2023 a predictive model for in hospital death two multivariate logistic regression models were introduced in the development cohort to predict in hospital death basic and full

igcse physics past papers questions by topic save my exams - Jul 14 2023

web exam paper questions organised by topic and difficulty our worksheets cover all topics from gcse igcse and a level courses give them a try and see how you do

libs task oigsci 06 0625 11 2021 cambridge assessment - Oct 05 2022

web cambridge igcse physics 0625 11 paper 1 multiple choice core may june 2021 45 minutes you must answer on the multiple choice answer sheet you will need multiple choice answer sheet soft clean eraser soft pencil type b or hb is recommended instructions there are forty questions on this paper answer all questions

cambridge igcse physics 0625 - Aug 15 2023

web the cambridge igcse physics syllabus helps learners to understand the technological world in which they live and take an informed interest in science and scientific developments before the exam phase 5 exam day phase 6 results and certificates information for schools about covid 19 june 2021 question paper 11 pdf 440kb

multiple choice questions sample exam questions astronomy - Mar 10 2023

web sample exam questions astronomy understanding how to approach exam questions helps to boost exam performance questions will include multiple choice structured

astronomy gcse physics single science revision bbc - Jun 01 2022

web links physics exam style questions prepare for gcse physics examinations personalise your bitesize jobs that use physics bbc science and environment bbc earth isaac physics

the life cycle of a star test questions edexcel gcse physics - Sep 04 2022

web the life cycle of a star test questions edexcel 1 what is a nebula a cloud of dust and gas a collection of billions of stars an

early solar system with a protostar planets and moons 2 what

stars the universe cie igcse physics multiple choice questions - Jun 13 2023

web easy medium hard model answers 1 1 mark which of the four possible shapes of galaxies shown could be the milky way choose your answer stuck view related notes did this page help you next question

igcse physics past years exam questions astrophysics - May 12 2023

web here you will find questions relating to the topic astrophysics use these to familiarise practice and prepare for your igcse physics examination table of contents what you need to know paper 1 and 2 8 astrophysics june 2019 paper 1p q8 june 2019 paper 1pr q1 june 2019 paper 2p q1 june 2019 paper 2 q7 june 2019 paper 2pr q4

edexcel igcse physics save my exams - Jul 02 2022

web free physics revision notes on distance time graphs designed by the teachers at save my exams for the edexcel igcse physics syllabus

igcse physics worksheets with answers pdf solved past papers - Dec 27 2021

web free solved past exam papers for igcse physics 0625 paper 6 sample copies for reference only october november 2016 solved variant 62 pdf october november 2017 solved variant 62 pdf as a paid membership for cambridge igcse practice questions and answers pdf topic wise physics solved past papers 0625 you get the following

grade gorilla igcse physics revision questions - Aug 03 2022

web full coverage of topics needed for edexcel and cambridge cie all questions are set primarily by topic not by paper the first block of questions covers double science triple science topics section

igcse astrophysics 83 plays quizizz - Feb 26 2022

web igcse astrophysics quiz for 9th grade students find other quizzes for physics and more on quizizz for free

igcse cie physics topic questions ig exams - Apr 11 2023

web cie igcse physics topic questions cie igcse physics topic questions questions organised by topic with model answers for the cie igcse physics course 0972 0625 multiple choice progress tracking questions model answers made by experienced teachers get started theory topic questions mark schemes get started

the solar system test questions edexcel gcse physics - Nov 06 2022

web gcse edexcel the solar system the sun is our nearest star it is a relatively small star when compared to other stars in the universe our solar system contains the sun and everything that orbits

edexcel igcse astrophysics gcse physics online - Apr 30 2022

web choose your topic motion in the universe our solar system our home in the universe and the bodies that exist within it orbits and gravity the ultimate force that allows planets and other objects to remain in orbit stellar evolution stars their life

cycle from birth to death and beyond cosmology

edexcel igcse physics astronomy flashcards quizlet - Dec 07 2022

web astronomy look up g c and the mass of the sun in appendix e and calculate the radius of a black hole that has the same mass as the sun note that this is only a theoretical calculation the sun does not have enough mass to become a black hole

three and four mark questions sample exam questions astronomy - Jan 08 2023

web sample exam questions astronomy understanding how to approach exam questions helps to boost exam performance questions will include multiple choice structured using mathematical

edexcel physics igcse topic 8 astrophysics physics maths - Feb 09 2023

web edexcel physics igcse topic 8 astrophysics summary notes content in bold is for physics only bit ly pmt cc bit ly pmt cc bit lypmt edu this work by pmt education is licensed under cc by nc nd 4 0 motion in the universe the universe is a large collection of billions of galaxies

cambridge igcse physics 0625 - Jan 28 2022

web cambridge igcse physics third edition collins this course provides complete coverage of the updated cambridge igcse physics syllabus and is packed full of questions in depth content practical investigative skills features and more read more on the collins website

part ii exam papers institute of astronomy - Mar 30 2022

web apr 20 2023 astrophysics part ii june 2012 papers 1 4 652 5 kb astrophysics part ii june 2013 papers 1 4 229 56 kb astrophysics part ii june 2014 papers 1 4 393 94 kb astrophysics part ii june 2015 papers 1 4 296 44 kb astrophysics part ii

2022 employee handbook - Mar 30 2022

web 2022 employee handbook introduction welcome to our amazing company purpose of this handbook mission statement your role in achieving our mission employee types full time employee full time employee regularly works at least 35 hours per week part time employee

tm handbook stores non exempt pdf docdroid - Apr 30 2022

web spring 2022 questions answers team member handbook stores non exempt this page has been intentionally left blank welcome to the target team at target we believe in investing in every single team member by providing opportunities to learn grow and develop to support your career journey take

employee handbook the complete guide for 2023 connecteam - Jan 28 2022

web aug 1 2023 compensation status and payroll while this part is mainly for u s companies which have laws on exempt and non exempt employees it is still important to know if it relates to you as well explain the legal framework and clarify the overtime rules let employees know on what day they will receive their salary or wages

target employee handbook example airmason blog - Dec 27 2021
web jun 27 2023 the target employee handbook encompasses various topics including equal employment opportunity harassment free workplace diversity and inclusion and safety reporting also addressing policy violations emphasizing diversity and inclusion additionally a commitment to creating an inclusive culture are key aspects of the target
target corporation code of ethics - Jun 13 2023
web target location you will be held accountable for understanding and following the code target policies procedures and the laws that apply to target when the code is violated if someone violates our policies ignores another team member s misconduct or pressures someone to violate our code the impact could damage target s reputation
team members and guests target - Jan 08 2023
web target is committed to continuing to build a diverse workforce that reflects the communities we serve we make data driven goals and transparently share progress with our team we set our goals on three year timeframes which provides enough time to make meaningful progress as an organization
target employee handbook example airmason blog - Oct 05 2022
web jun 27 2023 the target employee handbook includes policies on equal employment opportunity harassment free workplace diversity violence free workplace drug free workplace dress code personal and career development pay and benefits employee relations information protection safety and more
everything you need to know about being a target employee - Nov 06 2022
web target employee job duties the job duties of a target employee depend on the department s the employee works in and may include customer service greeting customers helping them ring up or return items and assisting them with locating items light janitorial duties sweeping dusting and vacuuming stocking stocking shelves
target dress code policy new updated 2023 sbxl - Jun 01 2022
web apr 6 2023 although it varies by store target staff is generally permitted to wear black jeans at work according to the company s employee manual target employees can dress in plain trousers as long as they don t have any patterns or purposeful tears is it permissible for me to wear crocs to target
supply chain labor human rights target - Dec 07 2022
web supply chain labor human rights policies human rights are central to how we do business we recognize that we can impact the human rights of our team members guests workers in the supply chain and the people in the communities in which we operate
code of ethics target corporation - Apr 11 2023
web team members are made aware of the code of ethics and reporting channels via new hire and annual ethics training and

the employee handbook code of ethics pdf defining ethics at target

target 2023 employee handbook r target reddit - Jul 14 2023

web mar 11 2023 target 2023 employee handbook hello just wanted to post to see if anyone could directly link the handbook to me i can t seem to find it i m sure it is on workday somewhere i would like to read more into it due to my stores negligence

employee benefits target corporation - Feb 09 2023

web check out target s employee benefits competitive pay store discount insurance coverage and education assistance are a few of the many perks

target team member services - Sep 04 2022

web target team member services halloween college ready for school grocery clothing shoes accessories baby home furniture kitchen dining outdoor living garden toys electronics video games movies music books sports outdoors beauty personal care health pets household essentials school office supplies arts crafts sewing party

team member handbook illness policy r target reddit - Aug 03 2022

web apr 25 2021 team member handbook illness policy stores non exempt team member handbook tinyurl com hzskkf4h team member illness policy us

team member handbook 2022 is available online and on reddit - Aug 15 2023

web apr 14 2022 team member handbook 2022 is available online and on reddit because this year s handbooks are available for download on workday i wanted to take a moment to add it to our subreddit the same links found on this page can be found in our current tm faq

copy of the 2023 handbook r target reddit - May 12 2023

web aug 9 2023 does anyone by any chance have a pdf copy of the updated handbook workday isn t allowing me to access it i m specifically just looking for the updated dress code so i can print it out as proof that i can wear shorts now

team member handbook benefits account manager - Mar 10 2023

web all target team members are employed at will which means that target can terminate the employment relationship at any time for any reason not prohibited by law team members have the same right therefore except for the policy of at will employment target s policies practices or procedures including this handbook do not

employee handbook best practices in 2023 forbes advisor - Feb 26 2022

web oct 18 2022 the employee handbook is an opportunity to welcome new employees provide information about the company and affirm company values in addition to policies and procedures that impact the workplace

target team member handbook airmason blog - Jul 02 2022

web aug 13 2023 the target team member handbook serves as a comprehensive guide to the policies guidelines benefits and

resources available to employees it provides essential information for new and existing team members to ensure a safe productive and supportive work environment