MAIN MENU
COVER PAGE
FOREWORD
TABLE OF CONTENTS
SECTION I - INTRODUCTION
SECTION E - ENGINE AND COMPONENT IDENTIFICATION
SECTION T - TROUBLESHOOTING
SECTION 1 - COOLING SYSTEM
SECTION 2 - LUBRICATION OIL SYSTEM
SECTION 3 - COMBUSTION AIR SYSTEM
GENERAL INFORMATION (03-01)
SPECIFICATIONS (03-02)
FLOW DIAGRAMS (03-03)
SERVICE TOOLS (03-04)
TURBOCHARGER TURBINE SEAL LEAKS - CHECK (03-05)
COMPRESSOR SEAL LEAKAGE - CHECK (03-06)
CORRECT TURBOCHARGER INSTALLED - CHECK (03-07)
INTAKE AIR RESTRICTION - CHECK (03-08)
EXHAUST RESTRICTION - CHECK (03-09)

Troubleshooting and Repair Manual K19 Engines

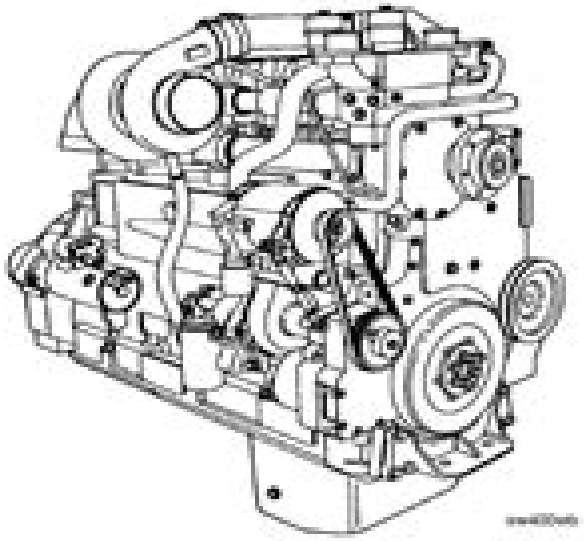

Copyright 1996
Cummins Engine Company, Inc.

Bulletin No. 3810007-00
Printed 9-96

Cummins Diesel Repair Manual

L Towne

Cummins Diesel Repair Manual:

Cummins Diesel Repair Manual: Bestsellers in 2023 The year 2023 has witnessed a remarkable surge in literary brilliance, with numerous compelling novels captivating the hearts of readers worldwide. Lets delve into the realm of popular books, exploring the captivating narratives that have enthralled audiences this year. The Must-Read : Colleen Hoovers "It Ends with Us" This poignant tale of love, loss, and resilience has captivated readers with its raw and emotional exploration of domestic abuse. Hoover expertly weaves a story of hope and healing, reminding us that even in the darkest of times, the human spirit can succeed. Cummins Diesel Repair Manual : Taylor Jenkins Reids "The Seven Husbands of Evelyn Hugo" This captivating historical fiction novel unravels the life of Evelyn Hugo, a Hollywood icon who defies expectations and societal norms to pursue her dreams. Reids compelling storytelling and compelling characters transport readers to a bygone era, immersing them in a world of glamour, ambition, and self-discovery. Cummins Diesel Repair Manual : Delia Owens "Where the Crawdads Sing" This captivating coming-of-age story follows Kya Clark, a young woman who grows up alone in the marshes of North Carolina. Owens spins a tale of resilience, survival, and the transformative power of nature, entrancing readers with its evocative prose and mesmerizing setting. These bestselling novels represent just a fraction of the literary treasures that have emerged in 2023. Whether you seek tales of romance, adventure, or personal growth, the world of literature offers an abundance of compelling stories waiting to be discovered. The novel begins with Richard Papen, a bright but troubled young man, arriving at Hampden College. Richard is immediately drawn to the group of students who call themselves the Classics Club. The club is led by Henry Winter, a brilliant and charismatic young man. Henry is obsessed with Greek mythology and philosophy, and he quickly draws Richard into his world. The other members of the Classics Club are equally as fascinating. Bunny Corcoran is a wealthy and spoiled young man who is always looking for a good time. Charles Tavis is a quiet and reserved young man who is deeply in love with Henry. Camilla Macaulay is a beautiful and intelligent young woman who is drawn to the power and danger of the Classics Club. The students are all deeply in love with Morrow, and they are willing to do anything to please him. Morrow is a complex and mysterious figure, and he seems to be manipulating the students for his own purposes. As the students become more involved with Morrow, they begin to commit increasingly dangerous acts. The Secret History is a exceptional and gripping novel that will keep you guessing until the very end. The novel is a cautionary tale about the dangers of obsession and the power of evil.

https://siliconezone.com/About/publication/HomePages/free%202004%20gmc%20sierra%20manual.pdf

Table of Contents Cummins Diesel Repair Manual

1. Understanding the eBook Cummins Diesel Repair Manual
    - The Rise of Digital Reading Cummins Diesel Repair Manual
    - Advantages of eBooks Over Traditional Books
2. Identifying Cummins Diesel Repair Manual
    - Exploring Different Genres
    - Considering Fiction vs. Non-Fiction
    - Determining Your Reading Goals
3. Choosing the Right eBook Platform
    - Popular eBook Platforms
    - Features to Look for in an Cummins Diesel Repair Manual
    - User-Friendly Interface
4. Exploring eBook Recommendations from Cummins Diesel Repair Manual
    - Personalized Recommendations
    - Cummins Diesel Repair Manual User Reviews and Ratings
    - Cummins Diesel Repair Manual and Bestseller Lists
5. Accessing Cummins Diesel Repair Manual Free and Paid eBooks
    - Cummins Diesel Repair Manual Public Domain eBooks
    - Cummins Diesel Repair Manual eBook Subscription Services
    - Cummins Diesel Repair Manual Budget-Friendly Options
6. Navigating Cummins Diesel Repair Manual eBook Formats
    - ePub, PDF, MOBI, and More
    - Cummins Diesel Repair Manual Compatibility with Devices
    - Cummins Diesel Repair Manual Enhanced eBook Features
7. Enhancing Your Reading Experience
    - Adjustable Fonts and Text Sizes of Cummins Diesel Repair Manual
    - Highlighting and Note-Taking Cummins Diesel Repair Manual
    - Interactive Elements Cummins Diesel Repair Manual
8. Staying Engaged with Cummins Diesel Repair Manual

    - Joining Online Reading Communities
    - Participating in Virtual Book Clubs
    - Following Authors and Publishers Cummins Diesel Repair Manual
9. Balancing eBooks and Physical Books Cummins Diesel Repair Manual
    - Benefits of a Digital Library
    - Creating a Diverse Reading Collection Cummins Diesel Repair Manual
10. Overcoming Reading Challenges
    - Dealing with Digital Eye Strain
    - Minimizing Distractions
    - Managing Screen Time
11. Cultivating a Reading Routine Cummins Diesel Repair Manual
    - Setting Reading Goals Cummins Diesel Repair Manual
    - Carving Out Dedicated Reading Time
12. Sourcing Reliable Information of Cummins Diesel Repair Manual
    - Fact-Checking eBook Content of Cummins Diesel Repair Manual
    - Distinguishing Credible Sources
13. Promoting Lifelong Learning
    - Utilizing eBooks for Skill Development
    - Exploring Educational eBooks
14. Embracing eBook Trends
    - Integration of Multimedia Elements
    - Interactive and Gamified eBooks

Cummins Diesel Repair Manual Introduction

In this digital age, the convenience of accessing information at our fingertips has become a necessity. Whether its research papers, eBooks, or user manuals, PDF files have become the preferred format for sharing and reading documents. However, the cost associated with purchasing PDF files can sometimes be a barrier for many individuals and organizations. Thankfully, there are numerous websites and platforms that allow users to download free PDF files legally. In this article, we will explore some of the best platforms to download free PDFs. One of the most popular platforms to download free PDF files is Project Gutenberg. This online library offers over 60,000 free eBooks that are in the public domain. From classic literature to

historical documents, Project Gutenberg provides a wide range of PDF files that can be downloaded and enjoyed on various devices. The website is user-friendly and allows users to search for specific titles or browse through different categories. Another reliable platform for downloading Cummins Diesel Repair Manual free PDF files is Open Library. With its vast collection of over 1 million eBooks, Open Library has something for every reader. The website offers a seamless experience by providing options to borrow or download PDF files. Users simply need to create a free account to access this treasure trove of knowledge. Open Library also allows users to contribute by uploading and sharing their own PDF files, making it a collaborative platform for book enthusiasts. For those interested in academic resources, there are websites dedicated to providing free PDFs of research papers and scientific articles. One such website is Academia.edu, which allows researchers and scholars to share their work with a global audience. Users can download PDF files of research papers, theses, and dissertations covering a wide range of subjects. Academia.edu also provides a platform for discussions and networking within the academic community. When it comes to downloading Cummins Diesel Repair Manual free PDF files of magazines, brochures, and catalogs, Issuu is a popular choice. This digital publishing platform hosts a vast collection of publications from around the world. Users can search for specific titles or explore various categories and genres. Issuu offers a seamless reading experience with its user-friendly interface and allows users to download PDF files for offline reading. Apart from dedicated platforms, search engines also play a crucial role in finding free PDF files. Google, for instance, has an advanced search feature that allows users to filter results by file type. By specifying the file type as "PDF," users can find websites that offer free PDF downloads on a specific topic. While downloading Cummins Diesel Repair Manual free PDF files is convenient, its important to note that copyright laws must be respected. Always ensure that the PDF files you download are legally available for free. Many authors and publishers voluntarily provide free PDF versions of their work, but its essential to be cautious and verify the authenticity of the source before downloading Cummins Diesel Repair Manual. In conclusion, the internet offers numerous platforms and websites that allow users to download free PDF files legally. Whether its classic literature, research papers, or magazines, there is something for everyone. The platforms mentioned in this article, such as Project Gutenberg, Open Library, Academia.edu, and Issuu, provide access to a vast collection of PDF files. However, users should always be cautious and verify the legality of the source before downloading Cummins Diesel Repair Manual any PDF files. With these platforms, the world of PDF downloads is just a click away.

FAQs About Cummins Diesel Repair Manual Books

What is a Cummins Diesel Repair Manual PDF? A PDF (Portable Document Format) is a file format developed by Adobe that preserves the layout and formatting of a document, regardless of the software, hardware, or operating system used to

view or print it. **How do I create a Cummins Diesel Repair Manual PDF?** There are several ways to create a PDF: Use software like Adobe Acrobat, Microsoft Word, or Google Docs, which often have built-in PDF creation tools. Print to PDF: Many applications and operating systems have a "Print to PDF" option that allows you to save a document as a PDF file instead of printing it on paper. Online converters: There are various online tools that can convert different file types to PDF. **How do I edit a Cummins Diesel Repair Manual PDF?** Editing a PDF can be done with software like Adobe Acrobat, which allows direct editing of text, images, and other elements within the PDF. Some free tools, like PDFescape or Smallpdf, also offer basic editing capabilities. **How do I convert a Cummins Diesel Repair Manual PDF to another file format?** There are multiple ways to convert a PDF to another format: Use online converters like Smallpdf, Zamzar, or Adobe Acrobats export feature to convert PDFs to formats like Word, Excel, JPEG, etc. Software like Adobe Acrobat, Microsoft Word, or other PDF editors may have options to export or save PDFs in different formats. **How do I password-protect a Cummins Diesel Repair Manual PDF?** Most PDF editing software allows you to add password protection. In Adobe Acrobat, for instance, you can go to "File" -> "Properties" -> "Security" to set a password to restrict access or editing capabilities. Are there any free alternatives to Adobe Acrobat for working with PDFs? Yes, there are many free alternatives for working with PDFs, such as: LibreOffice: Offers PDF editing features. PDFsam: Allows splitting, merging, and editing PDFs. Foxit Reader: Provides basic PDF viewing and editing capabilities. How do I compress a PDF file? You can use online tools like Smallpdf, ILovePDF, or desktop software like Adobe Acrobat to compress PDF files without significant quality loss. Compression reduces the file size, making it easier to share and download. Can I fill out forms in a PDF file? Yes, most PDF viewers/editors like Adobe Acrobat, Preview (on Mac), or various online tools allow you to fill out forms in PDF files by selecting text fields and entering information. Are there any restrictions when working with PDFs? Some PDFs might have restrictions set by their creator, such as password protection, editing restrictions, or print restrictions. Breaking these restrictions might require specific software or tools, which may or may not be legal depending on the circumstances and local laws.

Find Cummins Diesel Repair Manual :

free 2004 gmc sierra manual
free caprice haynes repair manual 1991 1996
~~free amazon books kindle~~
franco soldier commander dictator military profiles
free 2007 mitsubishi galant manual
free astrology readings online
free books on bacteriology

frankenstein or the modern prometheus the 1818 text by shelley mary wollstonecraft 1982
free 2001 vw service manual
free 2003 monte carlo service manual
franklin delano roosevelt a national hero sterling biographies
free bush tv service manual
~~free 2004 honda accord lx repair manual~~
free chevrolet repair manual s
free 2014 qashqai owners manual

Cummins Diesel Repair Manual :

Criminal Law (Gilbert Law Summaries) ... The topics discussed in this criminal law outline are elements of crimes (including actus reus, mens rea, and causation), vicarious liability, complicity in ... Dix and Abramson's Gilbert Law Summary on Criminal Law ... Jan 26, 2023 — The topics discussed in this criminal law outline are elements of crimes (including actus reus, mens rea, and causation), ... Marcus and Wilson's Gilbert Law Summary on Criminal ... Jun 29, 2021 — A criminal procedure outline that highlights all of the key criminal procedure decisions from the U.S. Supreme Court in an easy-to-read and ... Gilbert Law Summaries : Criminal Law: 9780159007679 The reality is that Criminal Law class really isn't that intense. You'll cover murder, privileges, common law crimes, and perhaps some of the Model Penal Code ... Gilbert Law Summaries - Study Aids GILBERT LAW SUMMARIES ON CRIMINAL LAW (20TH, 2022) 9781685613662. $56.15 ... GILBERT LAW SUMMARIES ON CRIMINAL PROCEDURE (20TH, 2021) 9781636590943. $54.18. Gilbert Law Summaries: Criminal Law The topics discussed in this criminal law outline are elements of crimes (including actus reus, mens rea, and causation), vicarious liability, complicity in ... Gilbert Law Summaries: Criminal Law - George E. Dix Gilbert Law Summaries: Criminal Law by George E. Dix - ISBN 10: 0159002176 - ISBN 13: 9780159002179 - Harcourt Legal & Professional - 1997 - Softcover. List of books by author Gilbert Law Summaries High Court Case Summaries, Criminal... by Gilbert Law Summaries. $50.02. Format ... Criminal Law and Its Processes: Cases and Materials (Casebook). Stephen J ... 9781685613662 | Gilbert Law Summary on Jan 26, 2023 — Rent textbook Gilbert Law Summary on Criminal Law(Gilbert Law Summaries) by Dix, George E. - 9781685613662. Price: $27.09. Gilbert Law Summaries : Criminal Law - Dix, George E. Gilbert Law Summaries : Criminal Law - Dix, George E. - Paperback - Good ; Item Number. 155838190316 ; Release Year. 2001 ; Book Title. Gilbert Law Summaries : ... Breathing Corpses (Oberon Modern Plays): Wade, Laura Book overview ... Amy's found another body in a hotel bedroom. There's a funny smell coming from one of Jim's storage units. And Kate's losing it after spending ... Breathing Corpses (Oberon Modern Plays) (Paperback) Laura Wade's plays include Home, I'm Darling (National Theatre), Posh (Royal

Court Theatre and West End), Tipping the Velvet (Lyric Theatre, Hammersmith), Alice ... Breathing Corpses (Oberon Modern Plays) - Softcover Breathing Corpses (Oberon Modern Plays) by Wade, Laura - ISBN 10: 1840025468 - ISBN 13: 9781840025460 - Oberon Books - 2006 - Softcover. The Watsons (Oberon Modern Plays) (Paperback) The Watsons (Oberon Modern Plays) (Paperback). The Watsons (Oberon Modern ... Breathing Corpses (Royal Court Theatre); Catch (Royal Court Theatre, written ... Breathing Corpses (Oberon Modern Plays) by Wade, Laura Wade, Laura ; Title: Breathing Corpses (Oberon Modern Plays) ; Publisher: Oberon Books ; Publication Date: 2006 ; Binding: Soft cover ; Condition: new. Reviews - Breathing Corpses (Oberon Modern Plays) (Oberon ... A fast-paced play that gives just enough information for you to glean an insight to the characters' relationships. It deals with heavy topics and leaves you ... Pre-Owned Breathing Corpses (Oberon Modern Plays) Paperback Pre-Owned Breathing Corpses (Oberon Modern Plays) Paperback. Series Title, Oberon Modern Plays. Publisher, Bloomsbury Publishing PLC. Book Format, Paperback. Laura Wade: Plays One (Oberon Modern Playwrights) ... Mar 23, 2023 — Colder Than Here: 'Laura Wade's play is a 90-minute masterpiece, a jewel, dark bu ttranslucent. · Breathing Corpses: 'The tension, the emotions ... Breathing Corpses - Laura Wade (Author) May 13, 2021 — Reviews · 'The tension, the emotions and the sense of absurdity and fear are brilliantly handled... A terrifying tour de force.' · '[A] powerful ... Breathing Corpses (Oberon Modern Plays) by Laura Wade (13- ... Breathing Corpses (Oberon Modern Plays) by Laura Wade (13-Mar-2005) Paperback. Laura Wade. 0.00. 0 ratings0 reviews. Want to read. Buy on Amazon. Owner Manuals | Bosch Home Appliances Learn the best operating tips as well as cleaning and care advice. Complete documentation is available for your Bosch appliance. Bosch Service Manuals If you are looking for all the Bosch Service Manuals, we've got you covered. Click to check all of them here! BOSCH - Dishwasher Repair Manual This Repair Manual is designed to assist you in the evaluation, diagnosis and repair of the current SHI, SHU and SHV model dishwasher series. To better ... User manual Bosch Logixx SGS0938 (English - 64 pages) Manual. View the manual for the Bosch Logixx SGS0938 here, for free. This manual comes under the category dishwashers and has been rated by 6 people with an ... User manual Bosch Logixx SGS0918 (72 pages) Manual. View the manual for the Bosch Logixx SGS0918 here, for free. This manual comes under the category dishwashers and has been rated by 2 people with an ... Bosch SPS40C12GB Repair Instructions - Dishwasher View and Download Bosch SPS40C12GB repair instructions online. SPS40C12GB dishwasher pdf manual download. Bosch LOGIXX 10 Manuals We have 2 BOSCH LOGIXX 10 manuals available for free PDF download: Operating, Care And Installation Instructions Manual, Installation And Instruction Manual ... List of Bosch Dishwasher Manuals and Instructions Bosch dishwasher manuals and troubleshooting. The brand is often associated with home and business electric appliance with high quality and durability. Bosch Dishwasher Repair & Maintenance Tutorial 1 - YouTube Anyone have a workshop manual for a Bosch Logixx ... Mar 28, 2010 — Anyone have a workshop manual for a Bosch Logixx dishwasher SGS66 A02GB/20 - Answered by a verified UK Appliance Technician.