Operator's Manual and Parts List

SULLAIR® COMPRESSOR

20/12 200-400HP (Air-Cooled) Industrial Rotary Screw Air Compressor

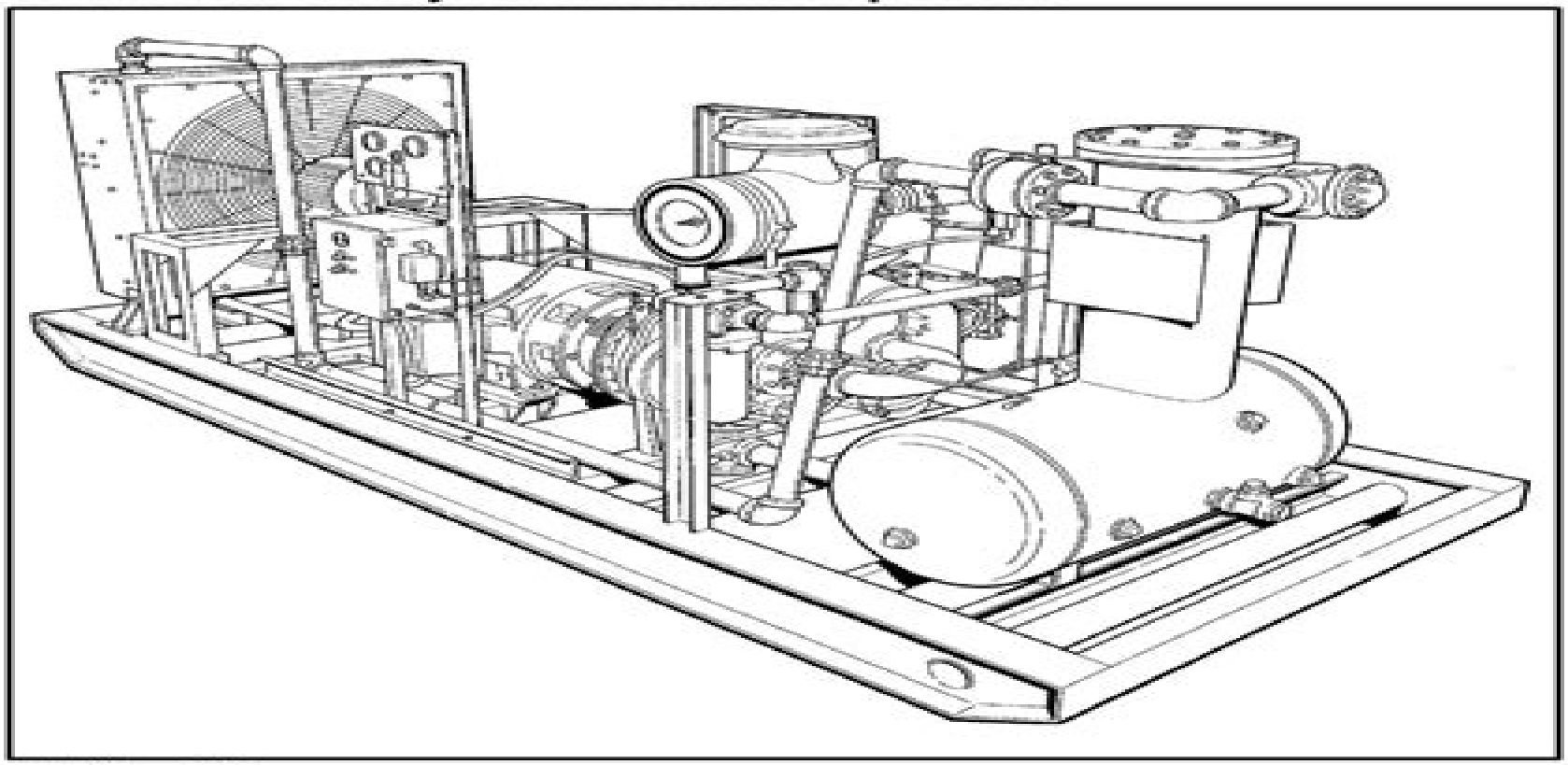

Part Number 253497
©Sullair Corporation

F4l2011f Parts Manual

BM King

F4l2011f Parts Manual:

As recognized, adventure as capably as experience not quite lesson, amusement, as capably as harmony can be gotten by just checking out a book **F4l2011f Parts Manual** as a consequence it is not directly done, you could receive even more in this area this life, on the subject of the world.

We present you this proper as with ease as simple pretentiousness to acquire those all. We pay for F4l2011f Parts Manual and numerous ebook collections from fictions to scientific research in any way. accompanied by them is this F4l2011f Parts Manual that can be your partner.

https://siliconezone.com/book/detail/HomePages/Ecrits%20Sur%20Musique%20Tantamen%20Theoria.pdf

Table of Contents F4l2011f Parts Manual

1. Understanding the eBook F4l2011f Parts Manual
    - The Rise of Digital Reading F4l2011f Parts Manual
    - Advantages of eBooks Over Traditional Books
2. Identifying F4l2011f Parts Manual
    - Exploring Different Genres
    - Considering Fiction vs. Non-Fiction
    - Determining Your Reading Goals
3. Choosing the Right eBook Platform
    - Popular eBook Platforms
    - Features to Look for in an F4l2011f Parts Manual
    - User-Friendly Interface
4. Exploring eBook Recommendations from F4l2011f Parts Manual
    - Personalized Recommendations
    - F4l2011f Parts Manual User Reviews and Ratings
    - F4l2011f Parts Manual and Bestseller Lists
5. Accessing F4l2011f Parts Manual Free and Paid eBooks

    - F4l2011f Parts Manual Public Domain eBooks
    - F4l2011f Parts Manual eBook Subscription Services
    - F4l2011f Parts Manual Budget-Friendly Options
6. Navigating F4l2011f Parts Manual eBook Formats
    - ePub, PDF, MOBI, and More
    - F4l2011f Parts Manual Compatibility with Devices
    - F4l2011f Parts Manual Enhanced eBook Features
7. Enhancing Your Reading Experience
    - Adjustable Fonts and Text Sizes of F4l2011f Parts Manual
    - Highlighting and Note-Taking F4l2011f Parts Manual
    - Interactive Elements F4l2011f Parts Manual
8. Staying Engaged with F4l2011f Parts Manual
    - Joining Online Reading Communities
    - Participating in Virtual Book Clubs
    - Following Authors and Publishers F4l2011f Parts Manual
9. Balancing eBooks and Physical Books F4l2011f Parts Manual
    - Benefits of a Digital Library
    - Creating a Diverse Reading Collection F4l2011f Parts Manual
10. Overcoming Reading Challenges
    - Dealing with Digital Eye Strain
    - Minimizing Distractions
    - Managing Screen Time
11. Cultivating a Reading Routine F4l2011f Parts Manual
    - Setting Reading Goals F4l2011f Parts Manual
    - Carving Out Dedicated Reading Time
12. Sourcing Reliable Information of F4l2011f Parts Manual
    - Fact-Checking eBook Content of F4l2011f Parts Manual
    - Distinguishing Credible Sources
13. Promoting Lifelong Learning
    - Utilizing eBooks for Skill Development

- Exploring Educational eBooks

14. Embracing eBook Trends
    - Integration of Multimedia Elements
    - Interactive and Gamified eBooks

F4l2011f Parts Manual Introduction

Free PDF Books and Manuals for Download: Unlocking Knowledge at Your Fingertips In todays fast-paced digital age, obtaining valuable knowledge has become easier than ever. Thanks to the internet, a vast array of books and manuals are now available for free download in PDF format. Whether you are a student, professional, or simply an avid reader, this treasure trove of downloadable resources offers a wealth of information, conveniently accessible anytime, anywhere. The advent of online libraries and platforms dedicated to sharing knowledge has revolutionized the way we consume information. No longer confined to physical libraries or bookstores, readers can now access an extensive collection of digital books and manuals with just a few clicks. These resources, available in PDF, Microsoft Word, and PowerPoint formats, cater to a wide range of interests, including literature, technology, science, history, and much more. One notable platform where you can explore and download free F4l2011f Parts Manual PDF books and manuals is the internets largest free library. Hosted online, this catalog compiles a vast assortment of documents, making it a veritable goldmine of knowledge. With its easy-to-use website interface and customizable PDF generator, this platform offers a user-friendly experience, allowing individuals to effortlessly navigate and access the information they seek. The availability of free PDF books and manuals on this platform demonstrates its commitment to democratizing education and empowering individuals with the tools needed to succeed in their chosen fields. It allows anyone, regardless of their background or financial limitations, to expand their horizons and gain insights from experts in various disciplines. One of the most significant advantages of downloading PDF books and manuals lies in their portability. Unlike physical copies, digital books can be stored and carried on a single device, such as a tablet or smartphone, saving valuable space and weight. This convenience makes it possible for readers to have their entire library at their fingertips, whether they are commuting, traveling, or simply enjoying a lazy afternoon at home. Additionally, digital files are easily searchable, enabling readers to locate specific information within seconds. With a few keystrokes, users can search for keywords, topics, or phrases, making research and finding relevant information a breeze. This efficiency saves time and effort, streamlining the learning process and allowing individuals to focus on extracting the information they need. Furthermore, the availability of free PDF books and manuals fosters a culture of continuous learning. By removing financial barriers, more people can access educational resources and pursue lifelong learning, contributing to personal growth and professional development. This democratization of knowledge promotes intellectual curiosity and empowers

individuals to become lifelong learners, promoting progress and innovation in various fields. It is worth noting that while accessing free F4l2011f Parts Manual PDF books and manuals is convenient and cost-effective, it is vital to respect copyright laws and intellectual property rights. Platforms offering free downloads often operate within legal boundaries, ensuring that the materials they provide are either in the public domain or authorized for distribution. By adhering to copyright laws, users can enjoy the benefits of free access to knowledge while supporting the authors and publishers who make these resources available. In conclusion, the availability of F4l2011f Parts Manual free PDF books and manuals for download has revolutionized the way we access and consume knowledge. With just a few clicks, individuals can explore a vast collection of resources across different disciplines, all free of charge. This accessibility empowers individuals to become lifelong learners, contributing to personal growth, professional development, and the advancement of society as a whole. So why not unlock a world of knowledge today? Start exploring the vast sea of free PDF books and manuals waiting to be discovered right at your fingertips.

FAQs About F4l2011f Parts Manual Books

1. Where can I buy F4l2011f Parts Manual books? Bookstores: Physical bookstores like Barnes & Noble, Waterstones, and independent local stores. Online Retailers: Amazon, Book Depository, and various online bookstores offer a wide range of books in physical and digital formats.
2. What are the different book formats available? Hardcover: Sturdy and durable, usually more expensive. Paperback: Cheaper, lighter, and more portable than hardcovers. E-books: Digital books available for e-readers like Kindle or software like Apple Books, Kindle, and Google Play Books.
3. How do I choose a F4l2011f Parts Manual book to read? Genres: Consider the genre you enjoy (fiction, non-fiction, mystery, sci-fi, etc.). Recommendations: Ask friends, join book clubs, or explore online reviews and recommendations. Author: If you like a particular author, you might enjoy more of their work.
4. How do I take care of F4l2011f Parts Manual books? Storage: Keep them away from direct sunlight and in a dry environment. Handling: Avoid folding pages, use bookmarks, and handle them with clean hands. Cleaning: Gently dust the covers and pages occasionally.
5. Can I borrow books without buying them? Public Libraries: Local libraries offer a wide range of books for borrowing. Book Swaps: Community book exchanges or online platforms where people exchange books.
6. How can I track my reading progress or manage my book collection? Book Tracking Apps: Goodreads, LibraryThing,

and Book Catalogue are popular apps for tracking your reading progress and managing book collections. Spreadsheets: You can create your own spreadsheet to track books read, ratings, and other details.

7. What are F4l2011f Parts Manual audiobooks, and where can I find them? Audiobooks: Audio recordings of books, perfect for listening while commuting or multitasking. Platforms: Audible, LibriVox, and Google Play Books offer a wide selection of audiobooks.
8. How do I support authors or the book industry? Buy Books: Purchase books from authors or independent bookstores. Reviews: Leave reviews on platforms like Goodreads or Amazon. Promotion: Share your favorite books on social media or recommend them to friends.
9. Are there book clubs or reading communities I can join? Local Clubs: Check for local book clubs in libraries or community centers. Online Communities: Platforms like Goodreads have virtual book clubs and discussion groups.
10. Can I read F4l2011f Parts Manual books for free? Public Domain Books: Many classic books are available for free as theyre in the public domain. Free E-books: Some websites offer free e-books legally, like Project Gutenberg or Open Library.

Find F4l2011f Parts Manual :

ecrits sur musique tantamen theoria
~~edgenuity english 4b 5 six weeks answers~~
edexcel certificateinternational gcse chemistry exam practice workbook with answers & online edition
eduardo kac & avital ronell life extreme an illustrated guide to new life
~~economics grade 10 exam papers 2014 june~~
economics of money banking and financial markets 10th edition
educating your child in modern times
edexcel gce biology mock paper pixl
~~economics principles in action answer key~~
economics study guide georgia
ecotoxicology ecological dimensions ettore majorana international science series
economy in society essays in honor of michael j piore
edith wharton abroad selected travel writings 1888 1920
economics health care foll solutions manual

economics of the environment berck answer key

F4l2011f Parts Manual :

final exam fluid mechanics 2012 amee 202 copy uniport edu - Nov 26 2021

final exam fluid mechanics 2012 amee 202 2022 - Jun 02 2022
web web4 final exam fluid mechanics 2012 amee 202 2020 11 26 dynamics in a sensible and logical fashion providing a great base for further learning official course
final exam fluid mechanics 2012 amee 202 2022 - Dec 08 2022
web fluid mechanics exam file final exam fluid mechanics 2012 amee 202 downloaded from iriss ac uk frederick vaughan fluid mechanics prentice hall covering
final exam fluid mechanics 2012 amee 202 iriss ac - Nov 07 2022
web final exam fluid mechanics 2012 amee 202 copy webschweizer 2012 12 06 this multi authored volume provides a comprehensive and in depth account of the highly
fluid mechanics jun main exam 2012 flme102 studocu - Sep 05 2022
web course code cv1012 course description learning objective to introduce the basic principles of fluid mechanics and the concepts of dimensional analysis and similitude
final exam fluid mechanics 2012 amee 202 copy wp publish - Oct 06 2022
web fluid mechanics jun main exam 2012 question paper university mangosuthu university of technology course fluid mechanics flme102 7 documents students shared 7
final exam fluid mechanics 2012 amee 202 full pdf - May 13 2023
web aug 6 2023 the final exam fluid mechanics 2012 amee 202 it is no question simple then previously currently we extend the associate to purchase and create bargains to
exam october 2012 questions me national - Oct 18 2023
web new results in numerical and experimental fluid mechanics x new results in numerical and experimental fluid mechanics xiii final exam fluid mechanics 2012 amee 202
final exam fluid mechanics 2012 amee 202 pdf uniport edu - Apr 12 2023
web apr 1 2023 final exam fluid mechanics 2012 amee 202 1 11 downloaded from uniport edu ng on april 1 2023 by guest final exam fluid mechanics 2012 amee 202
redirect - Jul 15 2023

web apr 4 2023 acquire the final exam fluid mechanics 2012 amee 202 pdf belong to that we manage to pay for here and check out the link you could purchase lead final exam

final exam fluid mechanics 2012 amee 202 pdf - May 01 2022

web jun 12 2023 final exam fluid mechanics 2012 amee 202 2 11 downloaded from uniport edu ng on june 12 2023 by guest system of environmental economic

final exam fluid mechanics 2012 amee 202 pdf book - Jun 14 2023

web mechanics of fluids presents fluid mechanics in a manner that helps students gain both an understanding of and an ability to analyze the important phenomena

download solutions finalexamfluidmechanics2012amee202 - Jan 29 2022

web apr 2 2023 final exam fluid mechanics 2012 amee 202 1 13 downloaded from uniport edu ng on april 2 2023 by guest final exam fluid mechanics 2012 amee 202

final exam fluid mechanics 2012 amee 202 copy uniport edu - Dec 28 2021

web aug 27 2023 final exam fluid mechanics 2012 amee 202 1 9 downloaded from uniport edu ng on august 27 2023 by guest final exam fluid mechanics 2012 amee

final exam fluid mechanics 2012 amee 202 - Jul 03 2022

web final exam fluid mechanics 2012 amee 202 nature inspired fluid mechanics pipe flow unsteady computational fluid dynamics in aeronautics direct modeling for

final exam fluid mechanics 2012 amee 202 pdf - Aug 16 2023

web redirect redirect

fluid mechanics exam2 pdf scribd - Feb 10 2023

web final exam fluid mechanics 2012 amee 202 acute surgical management feb 19 2020 acute surgical emergencies constitute one of the main clinical aspects that a doctor in

fluid mechanics final exam with answer key me 332 docsity - Feb 27 2022

web 1 finalexamfluidmechanics2012amee202 teaching medical professionalism nov 26 2022 this book presents ideas and guidance about human development to enhance

final exam fluid mechanics 2012 amee 202 2022 evt jyrankola - Sep 17 2023

web final exam fluid mechanics 2012 amee 202 turbulence and interactions jul 04 2023 the book presents a snapshot of the state of art in the field of turbulence modeling and

fluid mechanics the asian school of the environment ntu - Aug 04 2022

web final exam fluid mechanics 2012 amee 202 principles and practice of case based clinical reasoning education jul 01 2021

this book is open access under a cc by 4 0

final exam fluid mechanics 2012 amee 202 uniport edu - Mar 31 2022

web material type exam class fluid mechanics subject mechanical engineering university michigan state university term fall 2006 fluid mechanics final exam

final exam fluid mechanics 2012 amee 202 pdf uniport edu - Mar 11 2023

web fluid mechanics exam2 free download as pdf file pdf text file txt or read online for free fluid mechanics exam kuniv

ebook final exam fluid mechanics 2012 amee 202 - Jan 09 2023

web download and install final exam fluid mechanics 2012 amee 202 for that reason simple final exam fluid mechanics 2012 amee 202 downloaded from cybersmash io by

get the free kma 24h installation manual form pdffiller - Sep 05 2022

web the installation manual for kma 24h provides detailed instructions and guidelines on how to properly install and configure the audio control panel in an aircraft it includes information on electrical connections mounting procedures interconnectivity with other avionics equipment and troubleshooting guidelines

csobeech com beechcraft operating ownership tips blog - Feb 10 2023

web created date 6 9 2003 5 14 14 pm

kma 24 and kma 24h bendix king audio control systems aircraft spruce - May 13 2023

web kma 24 and kma 24h bendix king audio control systems push button simplicity puts complete flexible audio control right at your fingertips with bendix king s easy to use kma 24 and kma 24h systems each is self contained all solid state and stands only 1 3 inches high in your silver crown stack

bendix king kma 24h 70 71 maintenance manual 006 05586 0003 - May 01 2022

web bendix king kma 24h 70 71 maintenance manual 006 05586 0003 aircraftmaintenancemanuals com home avionics manual bendix king maintenance manuals bendix king kma 24h 70 71 maintenance manual 006 05586 0003

bendix king kma 24 audio panel marker beacon receiver installation manual - Jan 09 2023

web this manual contains information on the mechanical and electrical characteristics of the king radio corporation kma 24 audio panel with marker beacon receiver kma 24h installation manual the kma 24 is a compact fully tso d solid state unit containing a pushbutton audio selector panel speaker and headphone isolation amplifiers and a

kma 24 and kma 24h mike g - Jul 15 2023

web the optional installation of a remote three position switch for intercom operations with the kma 24h provides three modes isolate normal norm and private in isolate the pilot takes himself out of the intercom loop while the other four intercom positions remain active in normal all five intercom positions are tied together

installation and operation manual faa approved tso c50c jaa - Aug 16 2023
web installation and operator s manual 200 240 0010 page ii rev 29 sept 2021 2 9 post installation checkout 2 4 2 existing kma 24h installation
bendix king kma 24 installation manual documents and e books - Jun 14 2023
web download view bendix king kma 24 installation manual as pdf for free more details pages 28 preview full text download view bendix king kma 24 installation manual as pdf for free related documents bendix king kma 24 installation manual august 2021 0 kma 24 install october 2019 46 texecom premier 24 installation manual
bendix king kma 24 installation manual pdf scribd - Apr 12 2023
web bendix king kma 24 installation manual read online for free bendix king kma 24 installation manual
kma 24h installation manual by oing8 issuu - Mar 31 2022
web dec 30 2017 kma 24h installation manual download kma 24h installation manual free kma 24h installation manual full kma 24h installation manual pdf kma 24h installation manual ppt kma 24h
bendix king kma 24 manual pdf download manualslib - Oct 18 2023
web view and download bendix king kma 24 manual online audio control systems kma 24 recording equipment pdf manual download also for kma 24h
need installation manual for bendix king kma 24h vaf forums - Jun 02 2022
web feb 20 2013 i need a installation wiring and service manual for bendix king kma 24h audio panel if anyone who knows a link of pdf or sending it to my email address at rexallan eksklusib yahoo com i really appreciate it
alliedsignal kma 24 installation manual manualzz - Dec 08 2022
web view online 28 pages or download pdf 1 mb alliedsignal kma 24 installation manual kma 24 musical equipment pdf manual download and more alliedsignal online manuals
downloads manuals bendixking - Sep 17 2023
web downloads manuals if you can t find what your are looking for please contact technical support filter by current discontinued system part name type reset filters document title document title system part name part doc type
king kma 20 kr 21 kma 24 24h ka 25 25a kma 26 combined - Nov 07 2022
web installation manual kma 24h 65 68 audio control panel manual number 006 00522 0003 revision 3 march 30 1995 section i general information section ii installation section iii operation list of illustrations maintenance manual kma 24h 65 68 audio control panel manual number 006 05522 0002
existing kma 24h installation power xisting ps engineering - Mar 11 2023
web existing kma 24h installation if the installation replaces a kma 24h series 71 and it is properly installed and wired no

other changes are required except for removal of the keying pin other options not present in the kma24h such as entertainment or swap may require additional wiring speaker power j3 pin 7 is not required

bendixking kma 24h seaerospace com - Jul 03 2022

web detailed avionics part information page for bendixking kma 24h audio panel with price availability stock inventory features specifications and description

kma24h 70 71 installation manual pdf be hatch - Feb 27 2022

web sep 24 2022 the optional installation of a remote three position switch for intercom operations with the kma 24h provides three modes isolate normal norm and private kma 24h 70 71 installation manual click here to download

bendix king kma 24 audio panel marker beacon receiver installation manual - Aug 04 2022

web bendix king kma 24 audio panel marker beacon receiver installation manual this manual contains information on the mechanical and electrical characteristics of the king radio corporation kma 24 audio panel with marker beacon receiver kma 24h installation manual

king kma 24 audio panel installation manual pdf free - Oct 06 2022

web 1 king kma 24 audio panel installation manual 2 bendix king kma 24 audio panel and marker beacon 12h 9m king kma 20 marker beacon receiver audio panel king kma 24h audio install manual 96 69 4d 4h kma 24 audio panel install manual bendix king kma24 maintenance manuals 5 reference manual 1 notify me of

designing beauty the art of cellular automata request pdf - Apr 12 2023

web jan 1 2016 request pdf designing beauty the art of cellular automata this fascinating colourful book offers in depth insights and first hand working experiences in the production of art

designing beauty the art of cellular automata - Aug 04 2022

web three favorite cellular automata 35 clifford reiter cellular automata dying to live again architecture art design 39 robert j krawczyk in search of movement and life on a static grid 53 tim j hutton some beautiful and difficult questions about cellular automata 59 nathaniel johnston hyperbolic gallery 65 maurice margenstern

designing beauty the art of cellular automata searchworks - Jul 03 2022

web the book inspires artists to take on cellular automata as a tool of creativity and it persuades scientists to convert their research results into the works of art the book is lavishly illustrated with visually attractive examples presented in a lively and easily accessible manner

designing beauty the art of cellular automata euromathsoc - Jun 02 2022

web mar 21 2016 cellular automata ca are discrete time dynamical systems that consist of a regular grid of cells each cell has a finite number of possible states the state changes from one time instant to the next depending on the current states of

the cell and its neighbors following simple rules uniform over the grid

designing beauty the art of cellular automata emergence - May 01 2022

web designing beauty the art of cellular automata emergence complexity and computation 20 band 20 by andrew adamatzky genaro j martínez produced by cellular automata uncover mechanics of dynamic patterns formation their propagation and interaction in natural systems heart pacemaker bacterial membrane proteins chemical

designing beauty the art of cellular automata eme ken ichi - Nov 07 2022

web success bordering to the publication as well as sharpness of this designing beauty the art of cellular automata eme can be taken as with ease as picked to act the evolutionary foundations of economics kurt dopfer 2005 05 23 it is widely recognised that mainstream economics has failed to translate micro consistently into macro economics

designing beauty the art of cellular automata eme pdf - Feb 10 2023

web designing beauty the art of cellular automata mar 11 2021 this fascinating colourful book offers in depth insights and first hand working experiences in the production of art works using simple computational models with rich morphological behaviour at the

designing beauty the art of cellular automata emergence - Jan 09 2023

web designing beauty the art of cellular automata emergence complexity and computation 20 band 20 by andrew adamatzky genaro j martínez images and some of the interesting explorations that led to the particular calculations behind the images included in the book the images and the reference list together make the book a valuable

ayrıntılar designing beauty the art of cellular automata btÜ - Feb 27 2022

web designing beauty the art of cellular automata edited by andrew adamatzky genaro j martínez electronic resource katkıda bulunan lar adamatzky andrew editor martínez genaro j editor springerlink online service

designing beauty the art of cellular automata springerlink - Aug 16 2023

web this fascinating colourful book offers in depth insights and first hand working experiences in the production of art works using simple computational models with rich morphological behaviour at the edge of mathematics computer science physics and biology

designing beauty the art of cellular automata emergence - Dec 08 2022

web designing beauty the art of cellular automata emergence complexity and computation 20 band 20 by andrew adamatzky genaro j martínez barnard computing reviews april 2016 cellular automata ca are discrete time dynamical systems that consist of a regular grid of cells it is primarily a

designing beauty the art of cellular automata - Sep 05 2022

web this fascinating colourful book offers in depth insights and first hand working experiences in the production of art works

using simple designing beauty the art of cellular automata springerprofessional de

editors designing beauty the art of cellular automata - Oct 06 2022

web webelieve the works presented will inspire artists to take on cellular automata as theircreative tool and will persuade scientists to convert products of their research intothe artistic presentations attractive to general public andrew adamatzky bristolgenaro martinez mexico cityseptember 2015 viii

adamatzky a martínez g j eds designing beauty the art of - Dec 28 2021

web mar 26 2016 many of the cellular automata art works have been shown at major art exhibitions installations and performances others are newly born and awaiting for their fame to come the book offers in depth insights and first hand working experiences into production of art works using simple computational models with rich morphological

designing beauty the art of cellular automata emergence complexity - May 13 2023

web feb 5 2016 1st ed 2016 edition this fascinating colourful book offers in depth insights and first hand working experiences in the production of art works using simple computational models with rich morphological behaviour at the edge of mathematics computer science physics and biology

designing beauty the art of cellular automata google books - Mar 31 2022

web feb 5 2016 designing beauty the art of cellular automata this fascinating colourful book offers in depth insights and first hand working experiences in the production of art works using simple

altmetric designing beauty the art of cellular automata - Jan 29 2022

web chapter 5 cellular automata dying to live again architecture art design altmetric badge chapter 6 in search of movement and life on a static grid

designing beauty the art of cellular automata guide books - Jun 14 2023

web the book inspires artists to take on cellular automata as a tool of creativity and it persuades scientists to convert their research results into the works of art the book is lavishly illustrated with visually attractive examples presented in a lively and easily accessible manner

designing beauty the art of cellular automata google books - Mar 11 2023

web jan 5 2016 this fascinating colourful book offers in depth insights and first hand working experiences in the production of art works using simple computational models with rich morphological behaviour

designing beauty the art of cellular automata guide books - Jul 15 2023

web abstract this fascinating colourful book offers in depth insights and first hand working experiences in the production of art works using simple computational models with rich morphological behaviour at the edge of mathematics computer science physics and