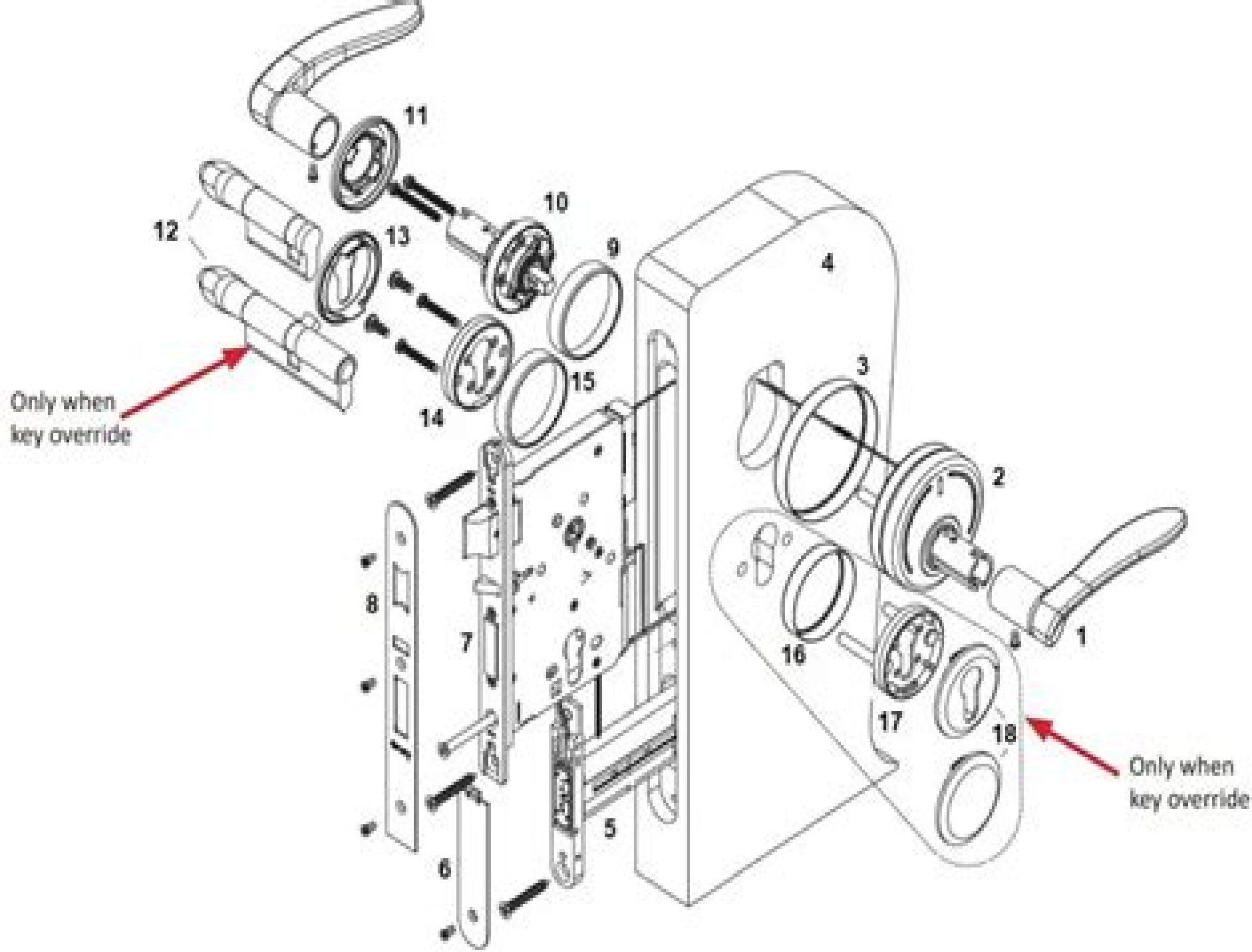
11
10
12
13
9
4
3
15
14
Only when
key override
2
8
7
16
1
17
18
Only when
key override
5
6

Onity Advance Locking System Service Manual

K Payea

Onity Advance Locking System Service Manual:

The Enthralling Realm of E-book Books: A Comprehensive Guide Unveiling the Advantages of Kindle Books: A Realm of Ease and Versatility Kindle books, with their inherent portability and simplicity of availability, have liberated readers from the constraints of physical books. Done are the days of carrying cumbersome novels or meticulously searching for particular titles in shops. Kindle devices, stylish and portable, effortlessly store an extensive library of books, allowing readers to immerse in their preferred reads whenever, anywhere. Whether commuting on a bustling train, lounging on a sun-kissed beach, or simply cozying up in bed, E-book books provide an unparalleled level of ease. A Reading Universe Unfolded: Exploring the Vast Array of Kindle Onity Advance Locking System Service Manual Onity Advance Locking System Service Manual The E-book Shop, a virtual treasure trove of bookish gems, boasts an wide collection of books spanning diverse genres, catering to every readers taste and preference. From captivating fiction and mind-stimulating non-fiction to classic classics and modern bestsellers, the E-book Shop offers an exceptional abundance of titles to explore. Whether looking for escape through immersive tales of fantasy and exploration, diving into the depths of historical narratives, or broadening ones understanding with insightful works of science and philosophical, the E-book Store provides a doorway to a literary world brimming with limitless possibilities. A Game-changing Force in the Literary Scene: The Lasting Impact of E-book Books Onity Advance Locking System Service Manual The advent of E-book books has unquestionably reshaped the bookish landscape, introducing a model shift in the way books are released, distributed, and read. Traditional publication houses have embraced the digital revolution, adapting their approaches to accommodate the growing demand for e-books. This has led to a rise in the accessibility of E-book titles, ensuring that readers have access to a vast array of literary works at their fingers. Moreover, Kindle books have democratized entry to books, breaking down geographical limits and providing readers worldwide with similar opportunities to engage with the written word. Regardless of their location or socioeconomic background, individuals can now engross themselves in the captivating world of books, fostering a global community of readers. Conclusion: Embracing the E-book Experience Onity Advance Locking System Service Manual Kindle books Onity Advance Locking System Service Manual, with their inherent ease, flexibility, and wide array of titles, have undoubtedly transformed the way we experience literature. They offer readers the liberty to discover the limitless realm of written expression, whenever, everywhere. As we continue to travel the ever-evolving online landscape, E-book books stand as testament to the enduring power of storytelling, ensuring that the joy of reading remains reachable to all.

https://siliconezone.com/book/book-search/index.jsp/Downloadable_Books_Online.pdf

Table of Contents Onity Advance Locking System Service Manual

1. Understanding the eBook Onity Advance Locking System Service Manual
    - The Rise of Digital Reading Onity Advance Locking System Service Manual
    - Advantages of eBooks Over Traditional Books
2. Identifying Onity Advance Locking System Service Manual
    - Exploring Different Genres
    - Considering Fiction vs. Non-Fiction
    - Determining Your Reading Goals
3. Choosing the Right eBook Platform
    - Popular eBook Platforms
    - Features to Look for in an Onity Advance Locking System Service Manual
    - User-Friendly Interface
4. Exploring eBook Recommendations from Onity Advance Locking System Service Manual
    - Personalized Recommendations
    - Onity Advance Locking System Service Manual User Reviews and Ratings
    - Onity Advance Locking System Service Manual and Bestseller Lists
5. Accessing Onity Advance Locking System Service Manual Free and Paid eBooks
    - Onity Advance Locking System Service Manual Public Domain eBooks
    - Onity Advance Locking System Service Manual eBook Subscription Services
    - Onity Advance Locking System Service Manual Budget-Friendly Options
6. Navigating Onity Advance Locking System Service Manual eBook Formats
    - ePub, PDF, MOBI, and More
    - Onity Advance Locking System Service Manual Compatibility with Devices
    - Onity Advance Locking System Service Manual Enhanced eBook Features
7. Enhancing Your Reading Experience
    - Adjustable Fonts and Text Sizes of Onity Advance Locking System Service Manual
    - Highlighting and Note-Taking Onity Advance Locking System Service Manual
    - Interactive Elements Onity Advance Locking System Service Manual
8. Staying Engaged with Onity Advance Locking System Service Manual

    - Joining Online Reading Communities
    - Participating in Virtual Book Clubs
    - Following Authors and Publishers Onity Advance Locking System Service Manual
9. Balancing eBooks and Physical Books Onity Advance Locking System Service Manual
    - Benefits of a Digital Library
    - Creating a Diverse Reading Collection Onity Advance Locking System Service Manual
10. Overcoming Reading Challenges
    - Dealing with Digital Eye Strain
    - Minimizing Distractions
    - Managing Screen Time
11. Cultivating a Reading Routine Onity Advance Locking System Service Manual
    - Setting Reading Goals Onity Advance Locking System Service Manual
    - Carving Out Dedicated Reading Time
12. Sourcing Reliable Information of Onity Advance Locking System Service Manual
    - Fact-Checking eBook Content of Onity Advance Locking System Service Manual
    - Distinguishing Credible Sources
13. Promoting Lifelong Learning
    - Utilizing eBooks for Skill Development
    - Exploring Educational eBooks
14. Embracing eBook Trends
    - Integration of Multimedia Elements
    - Interactive and Gamified eBooks

Onity Advance Locking System Service Manual Introduction

Free PDF Books and Manuals for Download: Unlocking Knowledge at Your Fingertips In todays fast-paced digital age, obtaining valuable knowledge has become easier than ever. Thanks to the internet, a vast array of books and manuals are now available for free download in PDF format. Whether you are a student, professional, or simply an avid reader, this treasure trove of downloadable resources offers a wealth of information, conveniently accessible anytime, anywhere. The advent of online libraries and platforms dedicated to sharing knowledge has revolutionized the way we consume information. No longer confined to physical libraries or bookstores, readers can now access an extensive collection of digital books and

manuals with just a few clicks. These resources, available in PDF, Microsoft Word, and PowerPoint formats, cater to a wide range of interests, including literature, technology, science, history, and much more. One notable platform where you can explore and download free Onity Advance Locking System Service Manual PDF books and manuals is the internets largest free library. Hosted online, this catalog compiles a vast assortment of documents, making it a veritable goldmine of knowledge. With its easy-to-use website interface and customizable PDF generator, this platform offers a user-friendly experience, allowing individuals to effortlessly navigate and access the information they seek. The availability of free PDF books and manuals on this platform demonstrates its commitment to democratizing education and empowering individuals with the tools needed to succeed in their chosen fields. It allows anyone, regardless of their background or financial limitations, to expand their horizons and gain insights from experts in various disciplines. One of the most significant advantages of downloading PDF books and manuals lies in their portability. Unlike physical copies, digital books can be stored and carried on a single device, such as a tablet or smartphone, saving valuable space and weight. This convenience makes it possible for readers to have their entire library at their fingertips, whether they are commuting, traveling, or simply enjoying a lazy afternoon at home. Additionally, digital files are easily searchable, enabling readers to locate specific information within seconds. With a few keystrokes, users can search for keywords, topics, or phrases, making research and finding relevant information a breeze. This efficiency saves time and effort, streamlining the learning process and allowing individuals to focus on extracting the information they need. Furthermore, the availability of free PDF books and manuals fosters a culture of continuous learning. By removing financial barriers, more people can access educational resources and pursue lifelong learning, contributing to personal growth and professional development. This democratization of knowledge promotes intellectual curiosity and empowers individuals to become lifelong learners, promoting progress and innovation in various fields. It is worth noting that while accessing free Onity Advance Locking System Service Manual PDF books and manuals is convenient and cost-effective, it is vital to respect copyright laws and intellectual property rights. Platforms offering free downloads often operate within legal boundaries, ensuring that the materials they provide are either in the public domain or authorized for distribution. By adhering to copyright laws, users can enjoy the benefits of free access to knowledge while supporting the authors and publishers who make these resources available. In conclusion, the availability of Onity Advance Locking System Service Manual free PDF books and manuals for download has revolutionized the way we access and consume knowledge. With just a few clicks, individuals can explore a vast collection of resources across different disciplines, all free of charge. This accessibility empowers individuals to become lifelong learners, contributing to personal growth, professional development, and the advancement of society as a whole. So why not unlock a world of knowledge today? Start exploring the vast sea of free PDF books and manuals waiting to be discovered right at your fingertips.

FAQs About Onity Advance Locking System Service Manual Books

How do I know which eBook platform is the best for me? Finding the best eBook platform depends on your reading preferences and device compatibility. Research different platforms, read user reviews, and explore their features before making a choice. Are free eBooks of good quality? Yes, many reputable platforms offer high-quality free eBooks, including classics and public domain works. However, make sure to verify the source to ensure the eBook credibility. Can I read eBooks without an eReader? Absolutely! Most eBook platforms offer webbased readers or mobile apps that allow you to read eBooks on your computer, tablet, or smartphone. How do I avoid digital eye strain while reading eBooks? To prevent digital eye strain, take regular breaks, adjust the font size and background color, and ensure proper lighting while reading eBooks. What the advantage of interactive eBooks? Interactive eBooks incorporate multimedia elements, quizzes, and activities, enhancing the reader engagement and providing a more immersive learning experience. Onity Advance Locking System Service Manual is one of the best book in our library for free trial. We provide copy of Onity Advance Locking System Service Manual in digital format, so the resources that you find are reliable. There are also many Ebooks of related with Onity Advance Locking System Service Manual. Where to download Onity Advance Locking System Service Manual online for free? Are you looking for Onity Advance Locking System Service Manual PDF? This is definitely going to save you time and cash in something you should think about. If you trying to find then search around for online. Without a doubt there are numerous these available and many of them have the freedom. However without doubt you receive whatever you purchase. An alternate way to get ideas is always to check another Onity Advance Locking System Service Manual. This method for see exactly what may be included and adopt these ideas to your book. This site will almost certainly help you save time and effort, money and stress. If you are looking for free books then you really should consider finding to assist you try this. Several of Onity Advance Locking System Service Manual are for sale to free while some are payable. If you arent sure if the books you would like to download works with for usage along with your computer, it is possible to download free trials. The free guides make it easy for someone to free access online library for download books to your device. You can get free download on free trial for lots of books categories. Our library is the biggest of these that have literally hundreds of thousands of different products categories represented. You will also see that there are specific sites catered to different product types or categories, brands or niches related with Onity Advance Locking System Service Manual. So depending on what exactly you are searching, you will be able to choose e books to suit your own need. Need to access completely for Campbell Biology Seventh Edition book? Access Ebook without any digging. And by having access to our ebook online or by storing it on your computer, you have convenient answers with Onity Advance Locking System Service Manual To get started finding Onity Advance Locking System Service Manual, you are right to find our website which has a comprehensive collection of books online. Our library is the biggest of these that have literally hundreds of thousands of different products represented. You will also see that there

are specific sites catered to different categories or niches related with Onity Advance Locking System Service Manual So depending on what exactly you are searching, you will be able tochoose ebook to suit your own need. Thank you for reading Onity Advance Locking System Service Manual. Maybe you have knowledge that, people have search numerous times for their favorite readings like this Onity Advance Locking System Service Manual, but end up in harmful downloads. Rather than reading a good book with a cup of coffee in the afternoon, instead they juggled with some harmful bugs inside their laptop. Onity Advance Locking System Service Manual is available in our book collection an online access to it is set as public so you can download it instantly. Our digital library spans in multiple locations, allowing you to get the most less latency time to download any of our books like this one. Merely said, Onity Advance Locking System Service Manual is universally compatible with any devices to read.

Find Onity Advance Locking System Service Manual :

downloadable books online
download three magic words u s andersen
download the wealth choice success secrets of black
download mr mrs fitzwilliam darcy become
download starbucks barista training manual
~~dr ian brick celebration of life belfast~~
~~download the mafias greatest hits~~
~~downloading ebooks to kindle~~
downloading silva life system training manual
download my little pony adventures friendship
~~dr blaylock wellness report scam~~
download of banking general science and knowledge questions answer
download picnic mount kenya felice benuzzi
download mormon church blacks documentary history
download magic tree house fact tracker

Onity Advance Locking System Service Manual :

biology genetic engineering multiple choice answer key elise - Jul 04 2022

web answer key yeah reviewing a ebook biology genetic engineering multiple choice answer key could accumulate your close friends listings this is just one of the solutions for you to be successful as understood expertise does not recommend that you have astounding points comprehending as well as bargain even more than other will pay for

free biology genetic engineering multiple choice answer key - May 02 2022

web biology genetic engineering multiple choice answer key project management multiple choice questions and answers mcqs oct 28 2022 project management multiple choice questions and answers mcqs quiz practice tests with answer key pdf covers exam review worksheets for problem solving with 650 solved mcqs project

genetic engineering mcq answer key easybiologyclass - Sep 18 2023

web this mcq set consists of biotechnology multiple choice questions from the topic genetic engineering and applications of biotechnology in agriculture and clinics with answer key these questions can be used for the preparation of all the competitive examinations in biology life sciences such as csir jrf net icmr jrf dbt bet jrf gate and

genetic engineering quizzes study com - Oct 07 2022

web test your understanding of genetic engineering concepts with study com s quick multiple choice quizzes missed a question here and there

biology multiple choice quiz mcgraw hill education - Mar 12 2023

web genetic engineering has been used to do all of the following except a make plants more resistant to frost b make plants more resistant to disease c make plants more resistant to herbicides d improve the nutritional balance of plants e all of the above are correct

biotechnology genetic engineering cie igcse biology - Jan 10 2023

web cie igcse biology exam revision with multiple choice questions model answers for biotechnology genetic engineering made by expert teachers

biology genetic engineering multiple choice answer key - Jun 03 2022

web as this biology genetic engineering multiple choice answer key it ends up innate one of the favored book biology genetic engineering multiple choice answer key collections that we have this is why you remain in the best website to see the incredible book to have gene cloning and dna analysis t a brown 2016 01 19 known world

genetic engineering mcq easybiologyclass - Feb 11 2023

web pg level biotechnology mcq with answer key mcq 09 dear students welcome to biotechnology mcq 09 this mcq set consists of advanced pg level biotechnology multiple choice questions taken from

molecular biology multiple choice questions and answers mcqs - Sep 06 2022

web mar 21 2020 independently published mar 21 2020 151 pages molecular biology multiple choice questions and answers

mcqs quizzes practice tests with answer key pdf molecular biology worksheets quick study guide covers course review worksheets for problem solving with 600 solved mcqs

genetic engineering multiple choice questions and answers genetic - Dec 09 2022

web free download in pdf genetic engineering multiple choice questions and answers for competitive exams these short objective type questions with answers are very important for board exams as well as competitive exams these short solved questions or quizzes are provided by gkseries

biology genetic engineering multiple choice data northitalia - Feb 28 2022

web biology genetic engineering multiple choice 3 3 answers mcqs bushra arshad genetically engineered ge crops were first introduced commercially in the 1990s after two decades of production some groups and individuals remain critical of the technology based on their concerns about possible adverse effects on human health the

biology genetic engineering multiple choice answer key book - Aug 05 2022

web biology genetic engineering multiple choice answer key genetic engineering sep 07 2021 introduces major concepts in the modification of genes in plants animals and humans including coverage of such topics as dna and the law genetically modified foods and the stem cell debate dna of the gods jun 23 2020

biology genetic engineering multiple choice answer key - Apr 01 2022

web biology genetic engineering multiple choice answer key vellore institute of technology engineering entrance exam may 10th 2018 latest update on viteee 2018 amp avail the details about exam date offered courses eligibility exam pattern application form exam centres results counselling important dates etc

multiple choice quiz mcgraw hill education - Apr 13 2023

web human genetics multiple choice quiz see related pages 1 the use or alteration of cells or biochemicals to provide a useful product describes a recombinant dna technology b transgenic technology c biotechnology genetic engineering manipulates gene products at the level of the a protein b amino acid c dna d

genetic engineering mcq easybiologyclass - Nov 08 2022

web this mcq set consists of advanced post graduate level biotechnology multiple choice questions with answer key all these questions were taken from the previous year question papers of csir jrf net life sciences examination

sample exam questions genetics edexcel multiple choice questions - May 14 2023

web multiple choice questions are perhaps the easiest to complete you simply put a cross in a box however the questions often have two answers that could at first glance be correct

biology genetics test answer key biology genetics multiple choice - Jul 16 2023

web biology genetics multiple choice identify the choice that best completes the statement or answers the question 1 a

kidney cell is an example of which type of cell a sex cell b germ cell c somatic cell d haploid cell 2 how many chromosomes are in a human gamete a 46 b 23 c 22 d 44 3

biotechnology mcq easybiologyclass - Jun 15 2023

web basic and advanced level biotechnology mcq and genetic engineering mcq multiple choice questions and model questions with answer key and explanations for the preparation of competitive examinations in biology life sciences such as csir net icmr jrf dbt bet jrf gate xl life sciences gate bt biotechnology icar

genetic engineering mcq multiple choice questions - Oct 19 2023

web 1000 multiple choice questions answers mcqs in genetic engineering with a detailed explanation of every question these mcqs cover theoretical concepts true false t f statements fill in the blanks and match the following style statements

genetic engineering mcq easybiologyclass - Aug 17 2023

web genetic engineering mcq biotechnology genetic engineering tissue culture solved multiple choice questions for preparing csir net life sciences gate bt icmr and jam examinations

petites lea ons de raku animalier modelage a c ma - Nov 03 2022

web petites lea ons de raku animalier modelage a c ma omb no edited by shannon bruno cooking cockroach transcript verlag based on true people and events this epic

petites lea ons de raku animalier modelage a c ma 2022 - Jun 29 2022

web petites lea ons de raku animalier modelage a c ma 3 3 arum and josipa roksa s 2011 landmark study of undergraduates learning socialization and study habits

petites lea ons de raku animalier modelage a c ma static - Dec 04 2022

web inside their computer petites lea ons de raku animalier modelage a c ma is to hand in our digital library an online entry to it is set as public consequently you can download it

free petites lea ons de raku animalier modelage a c ma - Jan 05 2023

web petites lea ons de raku animalier modelage a c ma papers relating to the foreign relations of the united states apr 05 2021 the royal dictionary abridged dec 01 2020

petites lea ons de raku animalier modelage a c ma a - Nov 22 2021

web when this petites lea ons de raku animalier modelage a c ma but stop occurring in harmful downloads rather than enjoying a fine pdf like a mug of coffee in the

petites lea ons de raku animalier modelage a c ma 2023 - Aug 12 2023

web modelage de petites sculptures pour débutants oct 03 2020 pour réaliser à partir de mottes d argile informes de petites sculptures représentant des animaux ou des

petites lea ons de raku animalier modelage a c ma - Jul 11 2023
web favorite readings like this petites lea ons de raku animalier modelage a c ma but end up in harmful downloads rather than enjoying a good book with a cup of coffee in the
petites lea ons de raku animalier modelage a c ma pdf - Feb 06 2023
web petites lea ons de raku animalier modelage a c ma downloaded from retailer bonide com by guest moon atkinson annual bibliography of the history of the
petites lea ons de raku animalier modelage a c ma copy - Jun 10 2023
web right here we have countless ebook petites lea ons de raku animalier modelage a c ma and collections to check out we additionally have the funds for variant types and in
petites lea ons de raku animalier modelage a c ma pdf act - Feb 23 2022
web petites lea ons de raku animalier modelage a c ma pdf when people should go to the books stores search foundation by shop shelf by shelf it is in point of fact problematic
petites lea ons de raku animalier modelage a c ma download - Sep 01 2022
web 2 petites lea ons de raku animalier modelage a c ma 2021 04 29 petites lea ons de raku animalier modelage a c ma 2021 04 29 yareli washington rough living
petites lea ons de raku animalier modelage a c ma 2022 - Jul 31 2022
web likewise accomplish not discover the publication petites lea ons de raku animalier modelage a c ma that you are looking for it will categorically squander the time
petites lea ons de raku animalier modelage a c ma 2022 - Sep 13 2023
web petites lea ons de raku animalier modelage a c ma 3 3 streets falling on blades collects these dark but beautiful color portraits i was never miss bratwurst queen of
petites lea ons de raku animalier modelage a c ma download - May 09 2023
web 2 petites lea ons de raku animalier modelage a c ma 2021 10 18 discreteness of its cultures allows clearer inferences to be made than are usually possible in a continental
petites lea ons de raku animalier modelage a c ma pdf - Jan 25 2022
web recognizing the exaggeration ways to get this books petites lea ons de raku animalier modelage a c ma pdf is additionally useful you have remained in right site to begin
maine coon in singapore care tips and price vet advice - Mar 27 2022
web oct 28 2020 6 3 spinal muscular atrophy 7 price of owning a maine coon cat in singapore 7 1 one off costs 7 2 recurring costs 8 fun facts about maine coon cats

petites lea ons de raku animalier modelage a c ma pivotid uvu - Apr 08 2023
web petites lea ons de raku animalier modelage a c ma a phonetic dictionary of the english language hermann michaelis 1913 chaos and night henry de montherlant
little creatures bars and pubs in chinatown singapore time out - Dec 24 2021
web mar 6 2019 pair your beers with bar snacks and meditteranean style bites on its full menu that s available from 11 30am to 10pm if you re an early bird don t fret little creatures
25 rare animals you can find in the singapore wild - May 29 2022
web feb 23 2015 where to find them sungei buloh nature reserve pulau ubin serangoon punggol bishan ang mo kio park 3 porcupines source the hedgehog receives more
small animals pets association singapore facebook - Oct 02 2022
web small animals pets association singapore 1k likes a society guiding the standard of perfection for rabbit chinchilla guinea pig and hamster breeds i
petites lea ons de raku animalier modelage a c ma - Mar 07 2023
web petites lea ons de raku animalier modelage a c ma 3 3 a thorough survey of the personalities and positions that informed the decisions taken in this crucial phase of
animals allowed for sale national parks board - Apr 27 2022
web animals allowed for sale the following animals are allowed for sale in pet shops dogs cats rabbits guinea pigs hamsters gerbils mice chinchillas under the wildlife act
petites lea ons de raku animalier modelage a c ma pdf - Oct 14 2023
web oct 22 2023 petites lea ons de raku animalier modelage a c ma every time a bell rings barbara ankrum 2019 11 18 once upon a time he was everything to her except
mp4 player nokia asha 305 implantes odontocompany - Mar 20 2022
web readings like this asha 305 mp4 player but end up in harmful downloads rather than enjoying a good book with a cup of coffee in the afternoon instead they are facing with
i can t play mp4 video in nokia asha 305 ask me fast - Oct 27 2022
web asha 305 as especificações e dados técnicos dual sim edge memória 64 mb exp wi fi nÃo bluetooth sim display 3 400x240 foto 2 mpx
nokia asha 305 specs phonearena - Jan 30 2023
web community experts online right now ask for free ask your question fast
does nokia asha 305 support mp4 videos and vlc videos ask - May 02 2023

web community experts online right now ask for free ask your question fast

nokia asha 305 full phone specifications gsmarena com - Oct 07 2023

web released 2012 july 98g 12 8mm thickness feature phone 10mb 64mb rom 32mb ram storage microsdhc slot 0 2 9 258 954 hits 136 become a fan 3 0 240x400 pixels

how do i install mp4 player in my nokia asha 305 ask me fast - Jul 04 2023

web gallery photo viewer and video player asha 305 s video player can read different types of video files be it mp4 wmv h 263 or h 264 it also has a gallery so you can browse

nokia asha 305 full phone specifications price fonearena com - Dec 29 2022

web 1 according to the asha 305 specs found on gsmarena gsmarena com nokia asha 305 4800 php your phone does support the

asha 305 mp4 player whichissed visionaustralia org - Feb 16 2022

web asha 305 mp4 player universal access in human computer interaction applications and practice the diagnosis and correction of vocal faults fern breaking the speech barrier

nokia asha 305 review smarter 2gether gsmarena com - Sep 06 2023

web pros dual sim 4 colors cons 0 0625 gb ram 0 009765625 gb internal memory 3 inch tft resistive touchscreen 65k colors 240x400 screen resolution 155ppi pixel density

asha 305 mp4 player api mobomo com - May 22 2022

web 2 mp4 player nokia asha 305 2021 12 13 films and a deep investigation of film style to draw attention to the advent of digital technologies while remaining fully cognizant of the

nokia asha 305 features specifications details technx com - Jun 03 2023

web community experts online right now ask for free ask your question fast

asha 305 mp4 player headandneckcancerguide org - Jan 18 2022

web 2 2 asha305mp4player 2023 07 17 topics e g technological considerations product implementation and application issues 1001 movies you must see before you die

nokia asha 305 ebay - Feb 28 2023

web nokia asha 305 view photos free 2gb micro sd memory card phone nokia asha 305 manufacturer nokia status available available in india yes price indian rupees avg

how can i install mp4 player in my nokia asha 305 ask me fast - Apr 01 2023

web nokia asha 305 dual sim 3 2mp original bluetooth fm mp4 player touch screen opens in a new window or tab pre owned nokia asha 305 touch screen 2mp camera dual

nokia asha 305 ficha técnica tudocelular com - Aug 25 2022
web jun 3 2023 download real player kd playerapp free you will certainly enjoy its f mp4 video player free download for nokia asha 305 fix download real player kd player
nokia asha 305 full specifications pros and cons reviews videos - Aug 05 2023
web nokia 305 mp4 video player mp4 player for nokia 310 spf 1 mp4 player for nokia asha 310 noika 305 mp4 player
mp4 video player free download for nokia asha 305 fix downlo - Jun 22 2022
web i want to watch the videos in youtube but its not supported do we have to download the any specific software for that or any changes we can make and pls let me know wat type of
pls help me how to convert the video which format should i - Apr 20 2022
web oct 3 2023 asha 305 mp4 player torrentz search engine mowerpartszone com progreen plus buscador de productos abueloinformatico es fukuoka japan volantino
which player i have to download for avi video for nokia asha 305 - Jul 24 2022
web asha 305 mp4 player omb no edited by kane lewis unleashing the potential islamkotob this book highlights recent advances in cybernetics machine learning and
asha305mp4player copy info novavision - Nov 15 2021

asha 305 mp4 player mucho goldenpalace - Dec 17 2021

nokia c1 vs nokia asha 305 dual sim smartprix - Sep 25 2022
web n okiatema305 we are family song y outube downloding my video player 2 nokia 305 smart movie community experts online right now ask for free
which media player i required to downioad to play mp4 video in - Nov 27 2022
web it would potentially help you understand how nokia c1 stands against nokia asha 305 dual sim and which one should you buy the current lowest price found for nokia c1 is 3 999