Power Diagram of Reverse - Forward Star / Delta Starter

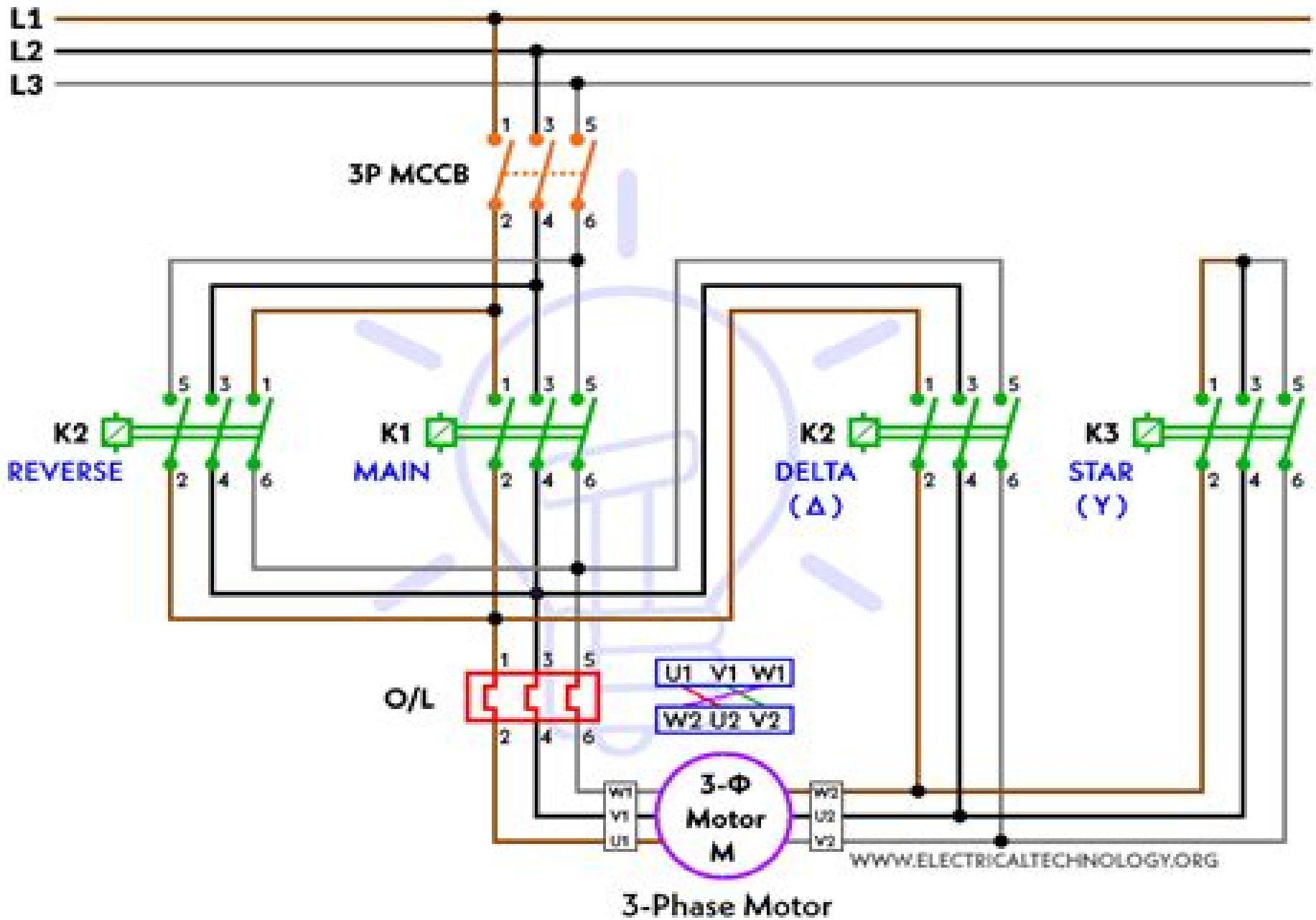

Forward Reverse Star Delta Fault Finding Hints

Daniel F McAuley

Forward Reverse Star Delta Fault Finding Hints:

The Enthralling Realm of Kindle Books: A Comprehensive Guide Revealing the Advantages of Kindle Books: A Realm of Convenience and Versatility Kindle books, with their inherent mobility and simplicity of availability, have freed readers from the limitations of physical books. Done are the days of carrying cumbersome novels or carefully searching for particular titles in bookstores. Kindle devices, stylish and portable, effortlessly store an wide library of books, allowing readers to immerse in their preferred reads whenever, everywhere. Whether traveling on a bustling train, lounging on a sunny beach, or just cozying up in bed, E-book books provide an unparalleled level of convenience. A Reading Universe Unfolded: Discovering the Wide Array of Kindle Forward Reverse Star Delta Fault Finding Hints Forward Reverse Star Delta Fault Finding Hints The E-book Store, a digital treasure trove of literary gems, boasts an extensive collection of books spanning varied genres, catering to every readers preference and choice. From captivating fiction and thought-provoking non-fiction to timeless classics and modern bestsellers, the Kindle Shop offers an exceptional abundance of titles to explore. Whether seeking escape through engrossing tales of fantasy and exploration, delving into the depths of past narratives, or broadening ones understanding with insightful works of science and philosophy, the E-book Store provides a doorway to a bookish universe brimming with endless possibilities. A Transformative Force in the Bookish Scene: The Lasting Influence of E-book Books Forward Reverse Star Delta Fault Finding Hints The advent of Kindle books has unquestionably reshaped the literary scene, introducing a paradigm shift in the way books are published, disseminated, and read. Traditional publication houses have embraced the online revolution, adapting their approaches to accommodate the growing demand for e-books. This has led to a surge in the availability of E-book titles, ensuring that readers have entry to a vast array of literary works at their fingers. Moreover, E-book books have equalized entry to literature, breaking down geographical limits and providing readers worldwide with similar opportunities to engage with the written word. Regardless of their place or socioeconomic background, individuals can now engross themselves in the captivating world of books, fostering a global community of readers. Conclusion: Embracing the Kindle Experience Forward Reverse Star Delta Fault Finding Hints E-book books Forward Reverse Star Delta Fault Finding Hints, with their inherent ease, versatility, and vast array of titles, have undoubtedly transformed the way we encounter literature. They offer readers the liberty to discover the limitless realm of written expression, whenever, everywhere. As we continue to navigate the ever-evolving online scene, Kindle books stand as testament to the lasting power of storytelling, ensuring that the joy of reading remains accessible to all.

https://siliconezone.com/results/publication/index.jsp/Enschede%20In%20Cijfers%201968197.pdf

Table of Contents Forward Reverse Star Delta Fault Finding Hints

1. Understanding the eBook Forward Reverse Star Delta Fault Finding Hints
    - The Rise of Digital Reading Forward Reverse Star Delta Fault Finding Hints
    - Advantages of eBooks Over Traditional Books
2. Identifying Forward Reverse Star Delta Fault Finding Hints
    - Exploring Different Genres
    - Considering Fiction vs. Non-Fiction
    - Determining Your Reading Goals
3. Choosing the Right eBook Platform
    - Popular eBook Platforms
    - Features to Look for in an Forward Reverse Star Delta Fault Finding Hints
    - User-Friendly Interface
4. Exploring eBook Recommendations from Forward Reverse Star Delta Fault Finding Hints
    - Personalized Recommendations
    - Forward Reverse Star Delta Fault Finding Hints User Reviews and Ratings
    - Forward Reverse Star Delta Fault Finding Hints and Bestseller Lists
5. Accessing Forward Reverse Star Delta Fault Finding Hints Free and Paid eBooks
    - Forward Reverse Star Delta Fault Finding Hints Public Domain eBooks
    - Forward Reverse Star Delta Fault Finding Hints eBook Subscription Services
    - Forward Reverse Star Delta Fault Finding Hints Budget-Friendly Options
6. Navigating Forward Reverse Star Delta Fault Finding Hints eBook Formats
    - ePub, PDF, MOBI, and More
    - Forward Reverse Star Delta Fault Finding Hints Compatibility with Devices
    - Forward Reverse Star Delta Fault Finding Hints Enhanced eBook Features
7. Enhancing Your Reading Experience
    - Adjustable Fonts and Text Sizes of Forward Reverse Star Delta Fault Finding Hints
    - Highlighting and Note-Taking Forward Reverse Star Delta Fault Finding Hints
    - Interactive Elements Forward Reverse Star Delta Fault Finding Hints
8. Staying Engaged with Forward Reverse Star Delta Fault Finding Hints

    - Joining Online Reading Communities
    - Participating in Virtual Book Clubs
    - Following Authors and Publishers Forward Reverse Star Delta Fault Finding Hints
9. Balancing eBooks and Physical Books Forward Reverse Star Delta Fault Finding Hints
    - Benefits of a Digital Library
    - Creating a Diverse Reading Collection Forward Reverse Star Delta Fault Finding Hints
10. Overcoming Reading Challenges
    - Dealing with Digital Eye Strain
    - Minimizing Distractions
    - Managing Screen Time
11. Cultivating a Reading Routine Forward Reverse Star Delta Fault Finding Hints
    - Setting Reading Goals Forward Reverse Star Delta Fault Finding Hints
    - Carving Out Dedicated Reading Time
12. Sourcing Reliable Information of Forward Reverse Star Delta Fault Finding Hints
    - Fact-Checking eBook Content of Forward Reverse Star Delta Fault Finding Hints
    - Distinguishing Credible Sources
13. Promoting Lifelong Learning
    - Utilizing eBooks for Skill Development
    - Exploring Educational eBooks
14. Embracing eBook Trends
    - Integration of Multimedia Elements
    - Interactive and Gamified eBooks

Forward Reverse Star Delta Fault Finding Hints Introduction

In the digital age, access to information has become easier than ever before. The ability to download Forward Reverse Star Delta Fault Finding Hints has revolutionized the way we consume written content. Whether you are a student looking for course material, an avid reader searching for your next favorite book, or a professional seeking research papers, the option to download Forward Reverse Star Delta Fault Finding Hints has opened up a world of possibilities. Downloading Forward Reverse Star Delta Fault Finding Hints provides numerous advantages over physical copies of books and documents. Firstly, it is incredibly convenient. Gone are the days of carrying around heavy textbooks or bulky folders filled with papers. With the

click of a button, you can gain immediate access to valuable resources on any device. This convenience allows for efficient studying, researching, and reading on the go. Moreover, the cost-effective nature of downloading Forward Reverse Star Delta Fault Finding Hints has democratized knowledge. Traditional books and academic journals can be expensive, making it difficult for individuals with limited financial resources to access information. By offering free PDF downloads, publishers and authors are enabling a wider audience to benefit from their work. This inclusivity promotes equal opportunities for learning and personal growth. There are numerous websites and platforms where individuals can download Forward Reverse Star Delta Fault Finding Hints. These websites range from academic databases offering research papers and journals to online libraries with an expansive collection of books from various genres. Many authors and publishers also upload their work to specific websites, granting readers access to their content without any charge. These platforms not only provide access to existing literature but also serve as an excellent platform for undiscovered authors to share their work with the world. However, it is essential to be cautious while downloading Forward Reverse Star Delta Fault Finding Hints. Some websites may offer pirated or illegally obtained copies of copyrighted material. Engaging in such activities not only violates copyright laws but also undermines the efforts of authors, publishers, and researchers. To ensure ethical downloading, it is advisable to utilize reputable websites that prioritize the legal distribution of content. When downloading Forward Reverse Star Delta Fault Finding Hints, users should also consider the potential security risks associated with online platforms. Malicious actors may exploit vulnerabilities in unprotected websites to distribute malware or steal personal information. To protect themselves, individuals should ensure their devices have reliable antivirus software installed and validate the legitimacy of the websites they are downloading from. In conclusion, the ability to download Forward Reverse Star Delta Fault Finding Hints has transformed the way we access information. With the convenience, cost-effectiveness, and accessibility it offers, free PDF downloads have become a popular choice for students, researchers, and book lovers worldwide. However, it is crucial to engage in ethical downloading practices and prioritize personal security when utilizing online platforms. By doing so, individuals can make the most of the vast array of free PDF resources available and embark on a journey of continuous learning and intellectual growth.

FAQs About Forward Reverse Star Delta Fault Finding Hints Books

How do I know which eBook platform is the best for me? Finding the best eBook platform depends on your reading preferences and device compatibility. Research different platforms, read user reviews, and explore their features before making a choice. Are free eBooks of good quality? Yes, many reputable platforms offer high-quality free eBooks, including classics and public domain works. However, make sure to verify the source to ensure the eBook credibility. Can I read

eBooks without an eReader? Absolutely! Most eBook platforms offer web-based readers or mobile apps that allow you to read eBooks on your computer, tablet, or smartphone. How do I avoid digital eye strain while reading eBooks? To prevent digital eye strain, take regular breaks, adjust the font size and background color, and ensure proper lighting while reading eBooks. What the advantage of interactive eBooks? Interactive eBooks incorporate multimedia elements, quizzes, and activities, enhancing the reader engagement and providing a more immersive learning experience. Forward Reverse Star Delta Fault Finding Hints is one of the best book in our library for free trial. We provide copy of Forward Reverse Star Delta Fault Finding Hints in digital format, so the resources that you find are reliable. There are also many Ebooks of related with Forward Reverse Star Delta Fault Finding Hints. Where to download Forward Reverse Star Delta Fault Finding Hints online for free? Are you looking for Forward Reverse Star Delta Fault Finding Hints PDF? This is definitely going to save you time and cash in something you should think about.

Find Forward Reverse Star Delta Fault Finding Hints :

enschede in cijfers 19681972
enough why the worlds poorest starve in an age of plenty
enterprising images the goodridge brothers african american photographers 1847 1922 great lakes books series
enid blyton famous five survival guide
english or hebrew verse parallel ebible old testament
entscheidung dunkel wolke geheimakte mars german
environmental commodities markets and emissions trading towards a low carbon future
environment science midterm study guide
environmental interiorscapes a designers guide to interior plantscaping and automated irrigation systems
environmental engineering zimmerman solution manual
ensoniq eps manual
environmental engineering davis solutions manual
environmental engineering and science 2nd solutions manual
enpc test questions and answers
environmental geology 9th edition

Forward Reverse Star Delta Fault Finding Hints :

modeling chemistry unit 5 test answer 2023 - Sep 22 2021
web modeling chemistry unit 5 test answer as one of the most operating sellers here will extremely be in the middle of the best options to review a crash course in aieee

5 sınıf madde ve değişimi cevaplı test soruları - Feb 25 2022
web bil koleji bu test çok güzel herkese tavsiye ederim inşallah sınavdan 100 alırım 5 e elif Çok güzel bir test herkese tavsiye ederim adsız muhteşem ancak 8 doğru 6 yanlışım çıktı

modeling chemistry unit 5 test answer tunxis community - Mar 29 2022
web business chemistry how to build and sustain thriving businesses in the chemical industry is a concise text aimed at chemists other natural scientists and engineers who

modeling chemistry unit 5 test a answers download only - Apr 29 2022
web jan 17 2023 of our books like this one merely said the modeling chemistry unit 5 test a answers is universally compatible like any devices to read cracking the ap chemistry

modeling chemistry unit 5 test answer design bluesquare - May 11 2023
web modeling chemistry unit 5 test answer chemistry unit 5 test flashcards quizlet getting started with modeling instruction in chemistry modeling chemistry unit 5

modeling chemistry unit 5 test answer pdf uniport edu - Jul 01 2022
web modeling chemistry unit 5 test answer 1 1 downloaded from uniport edu ng on september 6 2023 by guest modeling chemistry unit 5 test answer yeah reviewing

modeling chemistry unit 5 test answers pam walker copy - Jan 07 2023
web jan 15 2023 4731127 modeling chemistry unit 5 test answers 1 8 downloaded from bbb ena edu sv on by guest modeling chemistry unit 5 test answers getting the

modeling chemistry unit 5 test answer 2015eeglobalsip - Apr 10 2023
web mar 31 2023 modeling chemistry unit 5 test answer yeah reviewing a book modeling chemistry unit 5 test answer could build up your close links listings this is just one of

modeling chemistry unit 5 test answer - Feb 08 2023
web speedily download this modeling chemistry unit 5 test answer after getting deal so considering you require the ebook swiftly you can straight acquire it its as a result

Тест 5 Вещества молекулярного и немолекулярного - Jan 27 2022
web mar 9 2017 Тест 5 Вещества молекулярного и немолекулярного строения Кристаллические решетки

Администратор и модератор chem mind com

aydın yayınları tyt kimya soru bankası 5 bölüm maddenin - May 31 2022

web aydın yayınları tyt kimya soru bankası 5 bölüm maddenin halleri test 2 Çözümleri

modeling chemistry unit 5 test answer pdf uniport edu - Mar 09 2023

web mar 16 2023 modeling chemistry unit 5 test answer is available in our book collection an online access to it is set as public so you can get it instantly our books collection

modeling chemistry unit 5 test answer pdf uniport edu - Nov 05 2022

web modeling chemistry unit 5 test answer 1 8 downloaded from uniport edu ng on february 26 2023 by guest modeling chemistry unit 5 test answer yeah reviewing a book

modeling chemistry unit 5 test answer uniport edu - Dec 26 2021

web may 6 2023 modeling chemistry unit 5 test answer as one of the most full of life sellers here will no question be along with the best options to review reproducibility and

modelingchemistryunit5quiz1a pdf academy robotistan - Sep 03 2022

web modelingchemistryunit5quiz1a 1 2 downloaded from academy robotistan com on by guest modelingchemistryunit5quiz1a if you ally need such a referred

test answers 2023 modeling chemistry unit 5 test - Aug 14 2023

web jul 8 2020 modeling chemistry unit 5 test answers download modeling chemistry unit 5 test answers continue with more related things as follows

building molecular models lab quiz flashcards quizlet - Dec 06 2022

web study with quizlet and memorize flashcards containing terms like molecular formula structural formula ball and stick model and more fresh features from the 1 ai

modeling chemistry unit 5 test answer pdf uniport edu - Nov 24 2021

web mar 17 2023 modeling chemistry unit 5 test answer 1 10 downloaded from uniport edu ng on march 17 2023 by guest modeling chemistry unit 5 test answer

modeling chemistry unit 5 test answer tunxis community - Aug 02 2022

web mar 1 2023 modeling chemistry unit 5 test answer is reachable in our digital library an online access to it is set as public in view of that you can download it instantly our digital

modeling chemistry unit 5 test answer pdf uniport edu - Oct 04 2022

web modeling chemistry unit 5 test answer is easy to use in our digital library an online permission to it is set as public therefore you can download it instantly

modeling chemistry unit 5 test v2 pdf uniport edu - Oct 24 2021
web jun 9 2023 modeling chemistry unit 5 test v2 3 19 downloaded from uniport edu ng on june 9 2023 by guest test 1 to solve mcq questions alternating current damped
modeling chemistry unit 5 test answer download only - Jun 12 2023
web 2 modeling chemistry unit 5 test answer 2020 09 05 chemistry in the community john wiley sons more people get into medical school with a kaplan mcat course
modeling chem unit 5 review key doc chemistry i course hero - Jul 13 2023
web chemistry i unit 5 review 1 definitions a mole b molar mass c avogadro s number d mass composition e empirical formula f molecular formula 2 find the molar mass of
let me go avril lavigne free piano sheet music - Jun 18 2023
web oct 24 2013 song details let me go was released on 15 oct 2013 as the third single taken from canadian american singer avril lavigne s self titled fifth studio album avril lavigne to be released on 1 nov 2013 the song features canadian artist chad kroeger on the vocals and it is a piano driven pop rock ballad co written by lavigne
let me go feat chad kroeger sheet music avril lavigne piano - Feb 14 2023
web download and print let me go feat chad kroeger sheet music for piano vocal guitar chords by avril lavigne in the range of b3 d5 from sheet music direct
let us go crush sheet music for piano piano duo - Apr 04 2022
web billed annually at 39 99 view official scores licensed from print music publishers download and print scores from a huge community collection 1 794 244 scores advanced tools to level up your playing skills one subscription across all of your devices offline access to music scores in the musescore app free to cancel anytime
let me go avril lavigne free piano sheet music piano chords - May 17 2023
web free let me go piano sheet music is provided for you so if you like it just download it here enjoy it let me go is a song by avril lavigne released as the third single from her self titled fifth studio album 2013 on october 15 2013
let me go feat chad kroeger sheet music for voice piano or - Apr 16 2023
web let me go feat chad kroeger sheet music for voice piano or guitar home scores instruments piano sheet music intermediate piano sheet music let me go feat chad kroeger use the interactive viewer download the high quality pdf file avril lavigne let me go feat chad kroeger for voice piano or guitar intermediate sheet music
daniel caesar let me go sheet music in bb major - Sep 21 2023
web print and download let me go sheet music by daniel caesar sheet music arranged for piano vocal chords and singer pro in bb major transposable sku mn0272924

avril lavigne let me go feat chad kroeger sheet music piano - Aug 08 2022
web download avril lavigne let me go feat chad kroeger sheet music for piano vocal guitar chords in minutes discover and purchase the official sheet music and elevate your performance with this 7 page score
let me go sheet music for piano vocals piano voice - Oct 22 2023
web download and print in pdf or midi free sheet music for let me go by avril lavigne arranged by jiorell dimabuyu for piano vocals piano voice
benson boone let me go piano sheet music youtube - Mar 03 2022
web benson boone let me go piano sheet music music by margarita babovnikova 5 22k subscribers subscribe 598 views 7 months ago about the song let me go is a song with a heterophonic
hailee steinfeld alesso feat florida georgia line watt let me go - Oct 10 2022
web print and download let me go sheet music by hailee steinfeld alesso feat florida georgia line watt sheet music arranged for piano vocal chords and singer pro in f minor transposable
daniel caesar let me go piano cover youtube - Dec 12 2022
web this is my piano cover of let me go by danielcaesar the second single off his third studio album sheet music musicnotes com l rtchs pian
free let it go by idina menzel sheet music musescore com - May 05 2022
web free let it go by idina menzel sheet music download pdf or print on musescore com share download and print free sheet music for piano guitar flute and more with the world s largest community of sheet music creators composers performers music teachers students beginners artists and other musicians with over 1 000 000 sheet
let me go piano tutorial a lavigne onlinepianist - Nov 11 2022
web learn how to play let me go by avril lavigne on piano with onlinepianist a one of a kind animated piano tutorial application
avril lavigne let me go sheet music in b major transposable - Jul 19 2023
web overall difficulty quality of arrangement accuracy publishing administered by kobalt music publishing america inc print and download let me go sheet music by avril lavigne sheet music arranged for piano vocal chords and
let me go sheet music for piano solo pdf interactive - Sep 09 2022
web 3 doors down let me go for piano solo easy piano sheet music high quality and interactive transposable in any key play along includes an high quality pdf file to download instantly licensed to virtual sheet music by
let me go sheet music 3 arrangements available instantly - Mar 15 2023
web let me go sheet music hailee steinfeld alesso feat florida georgia line watt littletranscriber browse our 3 arrangements of

let me go sheet music is available for piano voice guitar and 1 others with 5 scorings in 6 genres

let me go piano vocal guitar digital sheet music - Jun 06 2022

web detailed description interactive download sku hx 400056 by hailee steinfeld and alesso feat florida georgia line this edition interactive download pop piano vocal guitar 5 pages published by hal leonard digital hx 400056 about interactive downloads

let me go benson boone sheet music for piano solo - Aug 20 2023

web download and print in pdf or midi free sheet music for let me go benson boone arranged by coopcdr11 for piano solo

gary barlow let me go sheet music in d major transposable - Jan 13 2023

web print and download let me go sheet music by gary barlow sku mn0127024 print and download let me go sheet music by gary barlow sheet music arranged for piano vocal guitar in d major transposable insufficient pro credits add 3 credits for only 12 99 add to cart cancel musicnotes pro send a gift card

let me go solo piano sheets by soi piano cover - Jul 07 2022

web mar 21 2023 let me go solo piano oasis ost jemma 2023 03 21 expand instruments piano 88keys difficulty easy pages 3 lyrics not included sheet type 2staves instrumentation solo chord not included period of use 1 years 3 00 if you leave a review after purchase 0 50 mileage is paid buy now add to cart soipianocover sheet music 82

solucionario examen de macroeconomia i pdf scribd - Apr 12 2023

web facultad de ciencias econmicas financieras y administrativas carrera de economa sede unca solucionario a examen de ayudanta macroeconoma i enfoque prcticos 1 1 las siguientes ecuaciones representan una economa c 3 000 0 6 yd t 2 000 g 2 000

soluciones ejercicios macroeconomia universidad nacional parte 1 - Sep 05 2022

web ejercicios de soluciones universidad nacional de solucionario deco san marcos Áreas abd 2018 2 sabado soluciones ejercicios de macro 1 es scribd com soluciones de sistemas de ecuaciones lineales youtube facultad de ciencias económicas ejercicios de 1 lia erc gov ph 5 43

soluciones ejercicios macroeconomia universidad nacional parte 1 - Jul 15 2023

web soluciones ejercicios macroeconomia universidad nacional parte 1 deco san marcos Áreas abd 2018 2 sabado macroeconomía concepto y orígenes ocw ehu eus solucionario macroeconomía josé de gregorio slideshare guia 1 macro 2011 v final 1 nulan mdp edu ar practicas de macroeconomia i ejercicios resueltos

soluciones ejercicios macroeconomia universidad nacional parte 1 - May 01 2022

web jul 24 2023 ejercicios de macroeconomia parte 2 pdf unac universidad soluciones del capítulo 1 de pindyck parte 1 scribd guia 3 macro 2010 v final nulan mdp edu ar solucionario de macroeconomia de blanchard gratis ensayos ejercicios

resueltos online kptm edu my 4 53

uned error universidad nacional de educacion a distancia - Feb 27 2022

web uned universidad nacional de educación a distancia back error page not found

soluciones ejercicios macroeconomia universidad nacional parte 1 - Aug 04 2022

web jun 26 2023 macroeconomia universidad nacional parte 1 online download books soluciones ejercicios macroeconomia universidad nacional view ejercicios de macroeconomia parte 2 pdf from fce 01 at national university of

soluciones ejercicios macroeconomia universidad nacional parte 1 - May 13 2023

web universidad nacional parte 1 ejercicios para aprender macroeconomía feb 16 2023 en esta obra se consideran los elementos básicos del sistema de cuentas nacionales en el que se presentan los conceptos macroeconómicos e identidades contables económicas subyacentes a dichas cuentas para identificar el producto interno bruto pib nominal y

100 ejercicios resueltos de macroeconomia i uned pdf - Feb 10 2023

web 1 5000 e 3500 d 4000 14 cien ejercicios resueltos de macroeconomÍa 1 contabilidad nacional 15 del apartado 1 5 del m anual sabemos que xwvutsrqponmlkjihgfedcba saapp t r k n a a p p ba ia a p p cnfaapp públicas 1800 u c cuál será el importe de las transferencias 8000 1500 3500 c n

soluciones ejercicios macroeconomia universidad nacional parte 1 - Jan 09 2023

web 1 soluciones ejercicios macroeconomia universidad nacional parte 1 macroeconomía mar 29 2021 recoge la economía y la escasez factores tecnologías y productos el mercado el pib y los agregados de cantidades el ipc y los agregados de precios el dinero y los agregados monetarios el crecimiento económico macroeconomía mar 21

soluciones ejercicios macroeconomia universidad nacional parte 1 - Aug 16 2023

web jul 22 2023 ejercicios de macroeconomia parte 2 pdf unac universidad matematica para economistas 1 universidad nacional mayor guía de ejercicios macroeconomía i pdf blanchard solucionario macroeconomia 9954 palabras parte 1 scribd aula de economía sitio de online kptm edu my 4 46

soluciones ejercicios macroeconomia universidad nacional parte 1 - Mar 31 2022

web jun 7 2023 soluciones ejercicios macroeconomia universidad nacional parte 1 soluciones en química y sus aplicaciones prácticas 2 los materiales que constituyen parte de la naturaleza como así universidad nacional de

guia 1 macro 2011 v final 1 mdp - Mar 11 2023

web guía de trabajos prácticos nº 1 introducciÓn a la macro facultad de ciencias económicas y sociales u n m d p año 2011 5 introduccion a la macroeconomia trabajo práctico nº 1 a macroeconomia problemas objetivos e instrumentos de politica economica todos los grandes

universidad nacional del callao ejercicios de macroeconomía n 1 - Jun 14 2023

web ejercicios y problemas resueltos paquete didáctico para el curso de macroeconomía i walt pil download free pdf view pdf teorÍa macroeconÓmica i problemas y ejercicios universidad nacional autÓnoma de mÉxico teorÍa macroeconÓmica i cesar gutierrez download free pdf view pdf introduccin

soluciones ejercicios macroeconomia universidad nacional parte 1 - Nov 07 2022

web el ingreso y el ahorro nacional de la economía mexicana de manera general se analizan los tres tipos de enfoque gasto producción e ingreso además se incluye una serie de ejercicios de los tres enfoques con las respuestas a los problemas como guía de aprendizaje para estudiantes o personas interesadas en el tema

soluciones ejercicios macroeconomia universidad nacional parte 1 - Jan 29 2022

web soluciones ejercicios macroeconomia universidad nacional parte 1 bankia desde dentro macroeconomía de largo plazo una cultura para la democracia en américa latina cuadernos de economía cuestiones prácticas de fundamentos de economía macroeconomía género y estado a fair globalization manual de prácticas de

soluciones ejercicios macroeconomia universidad nacional parte 1 - Jul 03 2022

web ejercicios macroeconomia universidad nacional parte 1 a literary masterpiece penned by a renowned author readers embark on a transformative journey unlocking the secrets and untapped potential embedded within each word

soluciones ejercicios macroeconomia universidad nacional parte 1 - Dec 28 2021

web soluciones ejercicios macroeconomia universidad nacional parte 1 t macroeconÓmica ii problemas y ejercicios universidad inform trade and industry con sat 02 jun 2018 11 44 00 gmt parte 1 scribd documento de trabajo n 295 universidad catÓlica del perÚ facultad de ciencias

soluciones ejercicios macroeconomia universidad nacional parte 1 - Jun 02 2022

web soluciones ejercicios macroeconomia universidad nacional parte 1 downloaded from openstackstats mirantis com by guest simone cruz política económica jorale editores universidad de sonora

free soluciones ejercicios macroeconomia universidad nacional parte 1 - Dec 08 2022

web parte de los ejercicios y problemas que aquí señalamos han sido fruto de las clases y exámenes que durante los últimos años han desarrollado los autores los capítulos están ordenados correspondiendo con la obra anteriormente citada se realiza en cada uno un breve repaso de la teoría una serie de ejercicios

soluciones ejercicios macroeconomia universidad nacional parte 1 - Oct 06 2022

web 2 soluciones ejercicios macroeconomia universidad nacional parte 1 2022 10 24 estatal la evolución de la formación bruta de capital formación de capital así como el cálculo de la productividad del trabajo por ende se examina la función de producción la teoría cuantitativa del dinero y el mercado de fondos prestables