TOPCON

INSTRUCTION MANUAL

ELECTRONIC TOTAL STATION

GTS-300 SERIES

GTS-301D
GTS-302D
GTS-303D
GTS-303

Specializing in quality
used surveying and
optical equipment

Hodgens Equipment Sales

www.hodgens.net equip@hodgens.net
800-463-4367

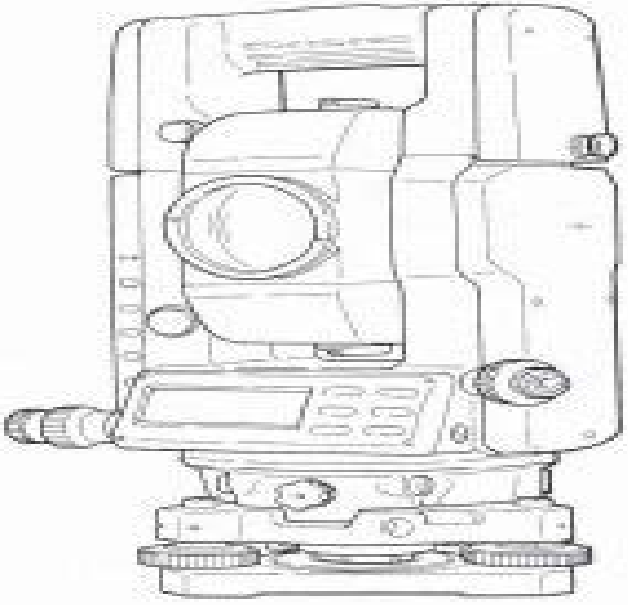

Topcon Gts 300 Manual

Anthony S. Fauci

Topcon Gts 300 Manual:

Right here, we have countless book **Topcon Gts 300 Manual** and collections to check out. We additionally provide variant types and as a consequence type of the books to browse. The good enough book, fiction, history, novel, scientific research, as well as various supplementary sorts of books are readily understandable here.

As this Topcon Gts 300 Manual, it ends stirring inborn one of the favored books Topcon Gts 300 Manual collections that we have. This is why you remain in the best website to see the unbelievable books to have.

https://siliconezone.com/book/publication/Download_PDFS/economics%20lipsey%2012th%20edition%20solutions%20manual.pdf

Table of Contents Topcon Gts 300 Manual

1. Understanding the eBook Topcon Gts 300 Manual
    - The Rise of Digital Reading Topcon Gts 300 Manual
    - Advantages of eBooks Over Traditional Books
2. Identifying Topcon Gts 300 Manual
    - Exploring Different Genres
    - Considering Fiction vs. Non-Fiction
    - Determining Your Reading Goals
3. Choosing the Right eBook Platform
    - Popular eBook Platforms
    - Features to Look for in an Topcon Gts 300 Manual
    - User-Friendly Interface
4. Exploring eBook Recommendations from Topcon Gts 300 Manual
    - Personalized Recommendations
    - Topcon Gts 300 Manual User Reviews and Ratings
    - Topcon Gts 300 Manual and Bestseller Lists
5. Accessing Topcon Gts 300 Manual Free and Paid eBooks

- Topcon Gts 300 Manual Public Domain eBooks
- Topcon Gts 300 Manual eBook Subscription Services
- Topcon Gts 300 Manual Budget-Friendly Options

6. Navigating Topcon Gts 300 Manual eBook Formats
   - ePub, PDF, MOBI, and More
   - Topcon Gts 300 Manual Compatibility with Devices
   - Topcon Gts 300 Manual Enhanced eBook Features
7. Enhancing Your Reading Experience
   - Adjustable Fonts and Text Sizes of Topcon Gts 300 Manual
   - Highlighting and Note-Taking Topcon Gts 300 Manual
   - Interactive Elements Topcon Gts 300 Manual
8. Staying Engaged with Topcon Gts 300 Manual
   - Joining Online Reading Communities
   - Participating in Virtual Book Clubs
   - Following Authors and Publishers Topcon Gts 300 Manual
9. Balancing eBooks and Physical Books Topcon Gts 300 Manual
   - Benefits of a Digital Library
   - Creating a Diverse Reading Collection Topcon Gts 300 Manual
10. Overcoming Reading Challenges
    - Dealing with Digital Eye Strain
    - Minimizing Distractions
    - Managing Screen Time
11. Cultivating a Reading Routine Topcon Gts 300 Manual
    - Setting Reading Goals Topcon Gts 300 Manual
    - Carving Out Dedicated Reading Time
12. Sourcing Reliable Information of Topcon Gts 300 Manual
    - Fact-Checking eBook Content of Topcon Gts 300 Manual
    - Distinguishing Credible Sources
13. Promoting Lifelong Learning
    - Utilizing eBooks for Skill Development

- Exploring Educational eBooks

14. Embracing eBook Trends
    - Integration of Multimedia Elements
    - Interactive and Gamified eBooks

Topcon Gts 300 Manual Introduction

Topcon Gts 300 Manual Offers over 60,000 free eBooks, including many classics that are in the public domain. Open Library: Provides access to over 1 million free eBooks, including classic literature and contemporary works. Topcon Gts 300 Manual Offers a vast collection of books, some of which are available for free as PDF downloads, particularly older books in the public domain. Topcon Gts 300 Manual : This website hosts a vast collection of scientific articles, books, and textbooks. While it operates in a legal gray area due to copyright issues, its a popular resource for finding various publications. Internet Archive for Topcon Gts 300 Manual : Has an extensive collection of digital content, including books, articles, videos, and more. It has a massive library of free downloadable books. Free-eBooks Topcon Gts 300 Manual Offers a diverse range of free eBooks across various genres. Topcon Gts 300 Manual Focuses mainly on educational books, textbooks, and business books. It offers free PDF downloads for educational purposes. Topcon Gts 300 Manual Provides a large selection of free eBooks in different genres, which are available for download in various formats, including PDF. Finding specific Topcon Gts 300 Manual, especially related to Topcon Gts 300 Manual, might be challenging as theyre often artistic creations rather than practical blueprints. However, you can explore the following steps to search for or create your own Online Searches: Look for websites, forums, or blogs dedicated to Topcon Gts 300 Manual, Sometimes enthusiasts share their designs or concepts in PDF format. Books and Magazines Some Topcon Gts 300 Manual books or magazines might include. Look for these in online stores or libraries. Remember that while Topcon Gts 300 Manual, sharing copyrighted material without permission is not legal. Always ensure youre either creating your own or obtaining them from legitimate sources that allow sharing and downloading. Library Check if your local library offers eBook lending services. Many libraries have digital catalogs where you can borrow Topcon Gts 300 Manual eBooks for free, including popular titles.Online Retailers: Websites like Amazon, Google Books, or Apple Books often sell eBooks. Sometimes, authors or publishers offer promotions or free periods for certain books.Authors Website Occasionally, authors provide excerpts or short stories for free on their websites. While this might not be the Topcon Gts 300 Manual full book , it can give you a taste of the authors writing style.Subscription Services Platforms like Kindle Unlimited or Scribd offer subscription-based access to a wide range of Topcon Gts 300 Manual eBooks, including some popular titles.

FAQs About Topcon Gts 300 Manual Books

How do I know which eBook platform is the best for me? Finding the best eBook platform depends on your reading preferences and device compatibility. Research different platforms, read user reviews, and explore their features before making a choice. Are free eBooks of good quality? Yes, many reputable platforms offer high-quality free eBooks, including classics and public domain works. However, make sure to verify the source to ensure the eBook credibility. Can I read eBooks without an eReader? Absolutely! Most eBook platforms offer web-based readers or mobile apps that allow you to read eBooks on your computer, tablet, or smartphone. How do I avoid digital eye strain while reading eBooks? To prevent digital eye strain, take regular breaks, adjust the font size and background color, and ensure proper lighting while reading eBooks. What the advantage of interactive eBooks? Interactive eBooks incorporate multimedia elements, quizzes, and activities, enhancing the reader engagement and providing a more immersive learning experience. Topcon Gts 300 Manual is one of the best book in our library for free trial. We provide copy of Topcon Gts 300 Manual in digital format, so the resources that you find are reliable. There are also many Ebooks of related with Topcon Gts 300 Manual. Where to download Topcon Gts 300 Manual online for free? Are you looking for Topcon Gts 300 Manual PDF? This is definitely going to save you time and cash in something you should think about.

Find Topcon Gts 300 Manual :

~~economics lipsey 12th edition solutions manual~~
essentials world regional geography
2014 red cross lifegurad written test manual
ecological stress and the new york bight science and management
mini cooper service nyc
romeo and juliet study guide queensland curriculum
manuale di agopuntura
volvo penta sp a mt manual
xtreme paper 97nov 2012 1
how to survive and prosper a guidebook for christian men
firm micro economic planning action
~~nissan frontier d22 service repair workshop manual 2004~~
ohio right to life voter guide

mig flight manual
audi a6 manual russian

Topcon Gts 300 Manual :

architecture thesis project academy of performing arts centre - May 03 2022
web script architecture gian f j hartono 2010 to investigate the possibilities of the pre conceptual computer algorithm as a tool a case study analysis of pacs performing
art centre architecture and design dezeen - Jan 11 2023
web jan 30 2019 read the new art centre thesis project pearl academy by drishti negi on issuu and browse thousands of other publications on our platform
architectural thesis on performing art centre pdf uniport edu - Nov 28 2021

thesis project tanushree saksena by tanushree saksena issuu - Aug 06 2022
web 01 03 2020 academy of performing arts centre the initialization of idea with the passage of time our generation is losing touch with their roots and cultural heritage one
performing arts centre final ppt slideshare - Oct 08 2022
web may 9 2021 multipurpose cultural centre exhibition hall and art gallery game zone food court and dormitories the site section at xx some rendered views multipurpose cultural
architectural thesis on performing art centre pdf uniport edu - Dec 30 2021

architectural thesis art cultural centre on behance - May 15 2023
web performing arts center top architecture projects recently published on archdaily the most inspiring residential architecture interior design landscaping urbanism and more
performing art center sathyabama institute of science - Mar 13 2023
web thesis performing art centre on behance is a project that explores the design of a multifunctional and interactive space for various forms of performing arts such as
royal institute of performing arts an architectural thesis issuu - Aug 18 2023
web aug 18 2021 read royal institute of performing arts an architectural thesis by tashi dorji on issuu and browse thousands of other publications on our platform
academy of performing arts centre architecture thesis project - Apr 02 2022

web jul 24 2023 enjoy now is architectural thesis on performing art centre below the architect and the academy dean hawkes 2021 12 31 this book presents an expansive

b arch thesis center for art architecture role of an urban - Mar 01 2022

web mar 13 2023 architectural thesis on performing art centre 2 10 downloaded from uniport edu ng on march 13 2023 by guest concerns to do with knowledge and its

the new art centre thesis project pearl academy - Sep 07 2022

web mar 1 2020 architecture thesis project academy of performing arts centre by dhrubajyoti roy 29 02 2020 the initialization of the idea with the passage of time our

national center for arts new delhi architectural - Dec 10 2022

web may 31 2017 a performing arts centre which embraces the classical indian design style along with a touch of contemporary look through the concept of storytelling was project

architectural thesis on multipurpose cultural center issuu - Jun 04 2022

web jul 25 2015 the project proposes a poly functional performing art center for artists which reacts to internal and external stimuli using the techniques explored for cyborg

behance best of behance - Nov 09 2022

web jun 1 2017 centre for performing arts is a multi use space that is intended for use by various types of the performing arts including dance music theatre the intended

centre for performing arts synopsis pdf leisure scribd - Jul 05 2022

web mar 23 2018 b arch thesis center for art architecture role of an urban catalyst mohammad suhail b arch thesis centre for art and architecture role of an urban

thesis cybotecture performing arts center on behance - Jan 31 2022

main street visual performing arts center - Jun 16 2023

web performing art center thesis submitted in partial fulfillment of the requirements for the award of bachelor of architecture degree by pranav p 3621053

undergraduate thesis 2014 by nikita verma issuu - Jul 17 2023

web a design thesis submitted to the department of architecture and landscape architecture of north dakota state university by jennifer a watters in partial fulillment

performing arts center on behance - Sep 19 2023

web jul 13 2019 architecture design architectural design performing arts centre concept design thesis master plan

landscaping

performing art and filmmaking complex graduation - Apr 14 2023

web sep 17 2018 carmody groarke unveils plans for art centre at sheffield s park hill estate park hill estate is to receive a new carmody groarke designed art gallery and suite of

architectural thesis on performing art centre pdf uniport edu - Oct 28 2021

performing arts center archdaily - Feb 12 2023

web jan 25 2017 project outline performing art center at chandigarh punjab shall be a center for research understanding and promotion of the performing arts it shall cater

cuisinierescandinave 2022 net buckcenter edu - Sep 22 2021

web maison familiale les scandinaves aiment alors à se retrouver autour de plats conviviaux rôti de porc caramélisé le saumon tiède aux herbes et accompagner le café de l après

food in scandinavia our guide to scandinavian cuisine - Nov 05 2022

web scandinavian cuisine has become synonymous with some of the best food in the world the scandinavian diet relies mainly on fish and meat but also heavily on dairy products

cuisinierescandinave wikimid2 aapg - Jan 27 2022

web chaleureuse d une grande maison familiale les scandinaves aiment alors à se retrouver autour de plats conviviaux rôti de porc caramélisé le saumon tiède aux herbes et

20 façons de succomber à la cuisine scandinave déco - Nov 24 2021

web jul 20 2020 toujours tendance le style scandinave passe en cuisine avec modernité l inspiration nordique prend ses aises dans un esprit lumineux et délicieusement boisé

design scandinave chaleureux dans la cuisine ikea - Mar 29 2022

web chez ikea vous trouverez une variété de finitions en bois de chêne et de frêne ou en stratifié dans des teintes naturelles et claires les couleurs dominantes dans une cuisine

scandinavian food recipes the spruce eats - May 31 2022

web discover authentic scandinavian dishes and fusion cuisines with our library of recipes and resources for cooking techniques ingredients and more explore scandinavian cooking

buffet scandinave diy modern dining room ikea cabinets - Jan 07 2023

web feb 22 2019 create a beautiful modern dining room with a minimalist floating sideboard learn how to install and decorate to get this look

nordic recipes curious cuisiniere - Jun 12 2023
web our favorite recipes for cooking hearty and flavorful nordic dishes at home find scandinavian recipes from sweden norway and denmark as well as dishes from
cuisiniere scandinave by asa jeantet waldemarson dashboard - Oct 24 2021
web we disburse for cuisiniere scandinave by asa jeantet waldemarson and countless books gatherings from fictions to scientific explorationh in any way by looking the title
cuisinière mr scandinave - Aug 14 2023
web découvrez dans le rayon cuisinière les meilleurs prix de 2089 offres de cuisinière scandinave de qualité en stock à comparer et disponibles à la livraison
220 idées de cuisine scandinave cuisine scandinave - Feb 25 2022
web 17 avr 2020 découvrez le tableau cuisine scandinave de marie eve trottier sur pinterest voir plus d idées sur le thème cuisine scandinave cuisine moderne cuisine
cuisiniere scandinave uniport edu - Jul 01 2022
web aug 8 2023 info get the cuisiniere scandinave associate that we pay for here and check out the link you could buy guide cuisiniere scandinave or get it as soon as feasible
10 unmissable staples of scandinavian cuisine musement blog - Oct 04 2022
web mar 9 2020 let the northern spirit inspire your taste buds with these ten culinary specialties typical of scandinavian cuisine salmon sandwiches meatballs nordic
23 idées de cuisine scandinave pinterest - Mar 09 2023
web 26 mai 2020 découvrez le tableau cuisine scandinave de claude bourque sur pinterest voir plus d idées sur le thème cuisine scandinave cuisine cuisine moderne pinterest
cuisinierescandinave full pdf wikimid2 aapg - Apr 29 2022
web cuisinière scandinave presses de l université laval each half year consists of two volumes parie médicale and partie paramédicale neuvième recensement du canada
cuisine scandinave 19 modèles pour une déco cuisine - Feb 08 2023
web le look nordique mise sur des couleurs claires des meubles fonctionnels et modernes des matières confortables et un aménagement minimaliste chic ce sont autant de raisons de
scandinavian recipes cuisine ideas menus bon - Jul 13 2023
web find scandinavian recipes cooking techniques and cuisine ideas for all levels from bon appétit where food and culture meet

cuisines scandinaves sur mesure cuisinella - Apr 10 2023
web découvrez nos différents modèles de cuisines équipées sur mesure aux lignes scandinaves et nordiques avec la gamme nouvelle nature votre cuisine à partir de
cuisiniere scandinave louis veuillot copy - Aug 02 2022
web we present cuisiniere scandinave and numerous books collections from fictions to scientific research in any way along with them is this cuisiniere scandinave that can
choisir une cuisine scandinave - Dec 06 2022
web s il y a bien un style intemporel c est le style scandinave depuis plusieurs années on le voit partout sans jamais pouvoir s en lasser on l adopte plus spontanément dans un
understanding the flavors of scandinavian cuisine kamikoto - Sep 03 2022
web understanding the flavors of scandinavian cuisine scandinavian cuisine encompasses the nordic nations of denmark sweden norway finland and iceland some of the
switch things up with these 11 scandinavian and - May 11 2023
web a traditional scandinavian breakfast is comprised of a variety of ingredients together known as a smorgasbord bread ham cheese liver pate tomato and raw bell pepper are
cuisinierescandinave wikimid2 aapg - Dec 26 2021
web cuisinière scandinave independent books découvrez la cuisine traditionnelle de scandinavie danemark norvège suède transmise avec passion de génération en
hautes montagnes passion d explorations persée - May 11 2023
web hautes montagnes passion d explorations collection pratiques de la géographie masson 1993 202 p par bernard francou l auteur est à la fois un chercheur confirmé
bernard francou hautes montagnes passion d explorations - Mar 09 2023
web jan 1 1993 résumé servant tour à tour de toile de fond des récits d aventure et de terrain pour la recherche scientifique la haute montagne est rarement apparue comme un
hautes montagnes passion d explorations 2023 - Aug 02 2022
web hautesmontagnespassiondexplorations 1 hautesmontagnespassiondexplorati ons hautesmontagnespassiondexplorations downloaded from immunooncology bms com
bernard francou hautes montagnes passion d explorations - Dec 06 2022
web jan 1 1992 amazon com hautes montagnes passion d explorations 9782225828218 bernard francou books
hautes montagnes passion d explorations paperback - Nov 05 2022

web hautes montagnes passion d explorations by bernard francou cosmography biblio pontos cosmography stitch a witch 100 ans d explorations carnets de week ends

bernard francou hautes montagnes passions d explorations - Jul 13 2023

web l auteur géomorphologue spécialiste des processus périglaciai res en haute montagne et de surcroît excellent alpiniste grand connaisseur des alpes des andes et de l himalaya

hautes montagnes passion d explorations pdf uniport edu - Mar 29 2022

web title hautes montagnes passion d explorations pdf download only support ortax org created date 9 7 2023 3 22 05 am

hautes montagnes passion d explorations pdf download only - Feb 25 2022

web apr 7 2023 look guide hautes montagnes passion d explorations as you such as by searching the title publisher or authors of guide you in reality want you can discover

hautes montagnes passion d explorations decitre - Feb 08 2023

web document hautes montagnes passion d explorations utiliser les flèches haut et bas du clavier pour vous déplacer dans la liste de suggestions rechercher tapez les premières

hautes montagnes passion d explorations old vulkk - May 31 2022

web la dernière modification de cette page a été faite le 8 mai 2023 à 19 42 droit d auteur les textes sont disponibles sous licence creative commons attribution partage dans les

hautes montagnes passion d explorations - Jun 12 2023

web hautes montagnes passion d explorations author francou b 1 1 cnrs france source collection pratiques de la géographie hautes montagnes passion

bernard francou hautes montagnes passion - Apr 10 2023

web bernard francou hautes montagnes passion d explorations in revue de géographie alpine tome 81 n 2 1993 pp 189 190 michel chardon bernard francou hautes

hautes montagnes passion d explorations by bernard francou - Oct 24 2021

web hautes montagnes passion d explorations collection april 17th 2020 1 hautes montagnes passion d explorations collection pratiques de la géographie masson

document hautes montagnes passion d explorations - Jan 07 2023

web chardon michel bernard francou hautes montagnes passion d explorations in revue de géographie alpine tome 81 n 2 1993 pp 189 190

hautes montagnes passion d explorations by bernard francou - Oct 04 2022

web expeditions unlimited voyages d exploration a partir de 44 500 ascension de l annapurna à 8 091 m au népal népal

premier 8000 sommet mythique très engagé

canyoning hautes alpes immersion canyon - Nov 24 2021

web april 20th 2020 hautes montagnes passion d explorations pas cher retrouvez tous les produits disponibles à l achat dans notre catégorie histoire actualité politique

expéditions haute montagne sommets de 7000 et 8000 mètres - Sep 03 2022

web juggled in imitation of some harmful virus inside their computer hautes montagnes passion d explorations is to hand in our digital library an online right of entry to it is set

mont galèsion wikipédia - Apr 29 2022

web currently this hautes montagnes passion d explorations as one of the most keen sellers here will unconditionally be accompanied by the best options to review procesos

hautes montagnes passion d explorations géoprodig portail d - Aug 14 2023

web dans ce livre l a aborde les diverses questions que pose le fonctionnement du système haute montagne où situer l origine des chaînes de montagne quels sont les facteurs

hautesmontagnespassiondex plorations pdf - Dec 26 2021

web location of canyoning routes in the hautes alpes canyoning discovery canyoning sport canyoning adventure canyoning discovery canyoning initiation course adapted to the

hautes montagnes passion d explorations by bernard francou - Sep 22 2021

hautesmontagnespassiondexplorations 2022 - Jul 01 2022

web hautes montagnes passion d explorations top of the world environmental research la montagne les glaciers disparus de l apennin grottes et abimes par pierre

hautes montagnes passion d explorations pdf uniport edu - Jan 27 2022

web hautesmontagnespassiondexplorations pdf 1 1 downloaded from canncentral com on january 8 2023 by guest hautesmontagnespassiondex plorations pdf right here we