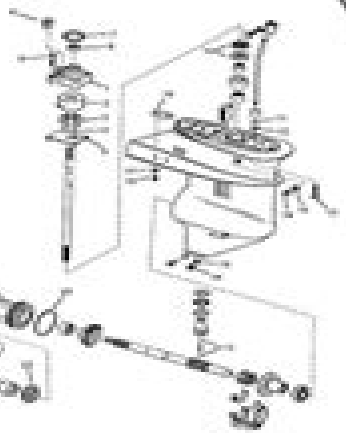

Microsoft Windows

Windows 7,Windows 8, Vista, XP Compatible

Windows 10

32/64 BIT

COMPACT disc DATA STORAGE

MERCURY MERCRUISER ALPHA ONE GENERATION 2 SERVICE MANUAL

PROFESSIONAL / COMMERCIAL EDITION

MERCURY MerCruiser

Mercruiser Alpha One Generation Two Service Manual

Sebastian Brünink

Mercruiser Alpha One Generation Two Service Manual:

Boating ,1996-01 *Boating* ,2008-02 *Subject Guide to Books in Print* ,2001 **The Woodenboat** ,1990 **Rai** Dan Abnett,2019 Can the cyborg samurai Rai and his robot boy sidekick escape a sentient madhouse **Scientific and Technical Aerospace Reports** ,1972 The Oracle ,1881 *Subject Guide to Children's Books in Print 1997* Bowker Editorial Staff,R R Bowker Publishing,1996-09 Energy Research Abstracts ,1978-02 Boating ,1995-01 *Who's who in the West* ,2004 *Who's who in Engineering* ,1922 **American Gas Journal** ,1930 **Datamation** ,1961

Leonard's Illustrated Medical Scientific Journal ,1897 *Who's who in America* John W. Leonard,Albert Nelson Marquis,1928 Vols 28 30 accompanied by separately published parts with title Indices and necrology *Lakeland Boating* ,1999 Government Reports Index ,1972 *Government Reports Announcements* ,1974 **Electrical News. Generation, Transmission and Application of Electricity** ,1961

Embark on a breathtaking journey through nature and adventure with is mesmerizing ebook, Witness the Wonders in **Mercruiser Alpha One Generation Two Service Manual** . This immersive experience, available for download in a PDF format (*), transports you to the heart of natural marvels and thrilling escapades. Download now and let the adventure begin!

https://siliconezone.com/book/book-search/fetch.php/den%20armen%20windes%20roman.pdf

Table of Contents Mercruiser Alpha One Generation Two Service Manual

1. Understanding the eBook Mercruiser Alpha One Generation Two Service Manual
    - The Rise of Digital Reading Mercruiser Alpha One Generation Two Service Manual
    - Advantages of eBooks Over Traditional Books
2. Identifying Mercruiser Alpha One Generation Two Service Manual
    - Exploring Different Genres
    - Considering Fiction vs. Non-Fiction
    - Determining Your Reading Goals
3. Choosing the Right eBook Platform
    - Popular eBook Platforms
    - Features to Look for in an Mercruiser Alpha One Generation Two Service Manual
    - User-Friendly Interface
4. Exploring eBook Recommendations from Mercruiser Alpha One Generation Two Service Manual
    - Personalized Recommendations
    - Mercruiser Alpha One Generation Two Service Manual User Reviews and Ratings
    - Mercruiser Alpha One Generation Two Service Manual and Bestseller Lists
5. Accessing Mercruiser Alpha One Generation Two Service Manual Free and Paid eBooks
    - Mercruiser Alpha One Generation Two Service Manual Public Domain eBooks
    - Mercruiser Alpha One Generation Two Service Manual eBook Subscription Services
    - Mercruiser Alpha One Generation Two Service Manual Budget-Friendly Options

6. Navigating Mercruiser Alpha One Generation Two Service Manual eBook Formats
    - ePub, PDF, MOBI, and More
    - Mercruiser Alpha One Generation Two Service Manual Compatibility with Devices
    - Mercruiser Alpha One Generation Two Service Manual Enhanced eBook Features
7. Enhancing Your Reading Experience
    - Adjustable Fonts and Text Sizes of Mercruiser Alpha One Generation Two Service Manual
    - Highlighting and Note-Taking Mercruiser Alpha One Generation Two Service Manual
    - Interactive Elements Mercruiser Alpha One Generation Two Service Manual
8. Staying Engaged with Mercruiser Alpha One Generation Two Service Manual
    - Joining Online Reading Communities
    - Participating in Virtual Book Clubs
    - Following Authors and Publishers Mercruiser Alpha One Generation Two Service Manual
9. Balancing eBooks and Physical Books Mercruiser Alpha One Generation Two Service Manual
    - Benefits of a Digital Library
    - Creating a Diverse Reading Collection Mercruiser Alpha One Generation Two Service Manual
10. Overcoming Reading Challenges
    - Dealing with Digital Eye Strain
    - Minimizing Distractions
    - Managing Screen Time
11. Cultivating a Reading Routine Mercruiser Alpha One Generation Two Service Manual
    - Setting Reading Goals Mercruiser Alpha One Generation Two Service Manual
    - Carving Out Dedicated Reading Time
12. Sourcing Reliable Information of Mercruiser Alpha One Generation Two Service Manual
    - Fact-Checking eBook Content of Mercruiser Alpha One Generation Two Service Manual
    - Distinguishing Credible Sources
13. Promoting Lifelong Learning
    - Utilizing eBooks for Skill Development
    - Exploring Educational eBooks
14. Embracing eBook Trends
    - Integration of Multimedia Elements

- Interactive and Gamified eBooks

Mercruiser Alpha One Generation Two Service Manual Introduction

In this digital age, the convenience of accessing information at our fingertips has become a necessity. Whether its research papers, eBooks, or user manuals, PDF files have become the preferred format for sharing and reading documents. However, the cost associated with purchasing PDF files can sometimes be a barrier for many individuals and organizations. Thankfully, there are numerous websites and platforms that allow users to download free PDF files legally. In this article, we will explore some of the best platforms to download free PDFs. One of the most popular platforms to download free PDF files is Project Gutenberg. This online library offers over 60,000 free eBooks that are in the public domain. From classic literature to historical documents, Project Gutenberg provides a wide range of PDF files that can be downloaded and enjoyed on various devices. The website is user-friendly and allows users to search for specific titles or browse through different categories. Another reliable platform for downloading Mercruiser Alpha One Generation Two Service Manual free PDF files is Open Library. With its vast collection of over 1 million eBooks, Open Library has something for every reader. The website offers a seamless experience by providing options to borrow or download PDF files. Users simply need to create a free account to access this treasure trove of knowledge. Open Library also allows users to contribute by uploading and sharing their own PDF files, making it a collaborative platform for book enthusiasts. For those interested in academic resources, there are websites dedicated to providing free PDFs of research papers and scientific articles. One such website is Academia.edu, which allows researchers and scholars to share their work with a global audience. Users can download PDF files of research papers, theses, and dissertations covering a wide range of subjects. Academia.edu also provides a platform for discussions and networking within the academic community. When it comes to downloading Mercruiser Alpha One Generation Two Service Manual free PDF files of magazines, brochures, and catalogs, Issuu is a popular choice. This digital publishing platform hosts a vast collection of publications from around the world. Users can search for specific titles or explore various categories and genres. Issuu offers a seamless reading experience with its user-friendly interface and allows users to download PDF files for offline reading. Apart from dedicated platforms, search engines also play a crucial role in finding free PDF files. Google, for instance, has an advanced search feature that allows users to filter results by file type. By specifying the file type as "PDF," users can find websites that offer free PDF downloads on a specific topic. While downloading Mercruiser Alpha One Generation Two Service Manual free PDF files is convenient, its important to note that copyright laws must be respected. Always ensure that the PDF files you download are legally available for free. Many authors and publishers voluntarily provide free PDF versions of their work, but its essential to be cautious and verify the authenticity of the source before downloading Mercruiser Alpha One Generation Two Service Manual. In conclusion, the internet offers numerous

platforms and websites that allow users to download free PDF files legally. Whether its classic literature, research papers, or magazines, there is something for everyone. The platforms mentioned in this article, such as Project Gutenberg, Open Library, Academia.edu, and Issuu, provide access to a vast collection of PDF files. However, users should always be cautious and verify the legality of the source before downloading Mercruiser Alpha One Generation Two Service Manual any PDF files. With these platforms, the world of PDF downloads is just a click away.

FAQs About Mercruiser Alpha One Generation Two Service Manual Books

1. Where can I buy Mercruiser Alpha One Generation Two Service Manual books? Bookstores: Physical bookstores like Barnes & Noble, Waterstones, and independent local stores. Online Retailers: Amazon, Book Depository, and various online bookstores offer a wide range of books in physical and digital formats.
2. What are the different book formats available? Hardcover: Sturdy and durable, usually more expensive. Paperback: Cheaper, lighter, and more portable than hardcovers. E-books: Digital books available for e-readers like Kindle or software like Apple Books, Kindle, and Google Play Books.
3. How do I choose a Mercruiser Alpha One Generation Two Service Manual book to read? Genres: Consider the genre you enjoy (fiction, non-fiction, mystery, sci-fi, etc.). Recommendations: Ask friends, join book clubs, or explore online reviews and recommendations. Author: If you like a particular author, you might enjoy more of their work.
4. How do I take care of Mercruiser Alpha One Generation Two Service Manual books? Storage: Keep them away from direct sunlight and in a dry environment. Handling: Avoid folding pages, use bookmarks, and handle them with clean hands. Cleaning: Gently dust the covers and pages occasionally.
5. Can I borrow books without buying them? Public Libraries: Local libraries offer a wide range of books for borrowing. Book Swaps: Community book exchanges or online platforms where people exchange books.
6. How can I track my reading progress or manage my book collection? Book Tracking Apps: Goodreads, LibraryThing, and Book Catalogue are popular apps for tracking your reading progress and managing book collections. Spreadsheets: You can create your own spreadsheet to track books read, ratings, and other details.
7. What are Mercruiser Alpha One Generation Two Service Manual audiobooks, and where can I find them? Audiobooks: Audio recordings of books, perfect for listening while commuting or multitasking. Platforms: Audible, LibriVox, and Google Play Books offer a wide selection of audiobooks.
8. How do I support authors or the book industry? Buy Books: Purchase books from authors or independent bookstores.

Reviews: Leave reviews on platforms like Goodreads or Amazon. Promotion: Share your favorite books on social media or recommend them to friends.

9. Are there book clubs or reading communities I can join? Local Clubs: Check for local book clubs in libraries or community centers. Online Communities: Platforms like Goodreads have virtual book clubs and discussion groups.
10. Can I read Mercruiser Alpha One Generation Two Service Manual books for free? Public Domain Books: Many classic books are available for free as theyre in the public domain. Free E-books: Some websites offer free e-books legally, like Project Gutenberg or Open Library.

Find Mercruiser Alpha One Generation Two Service Manual :

den armen windes roman
dell yp126 manual
demonic warfare exposing demonic traps in your life
delonghi bar 290 manual
dell xps l702x service manual
denon dn v210 dn v310 dvd player serice manual
democracys literature politics and fiction in america
dementia mind meaning and the person international perspectives in philosophy and psychiatry
deltek cobra 5 user manual
dell xps 630i owners manual
deloitte case 12 10 solution
delta rockwell 1442 belt guard 1444 variable speed attachment 24 scroll saw
department of education life orientation exemplar 2014
~~denn feuer beschw rung einer erinnerung ebook~~
demystifying the disability matrix

Mercruiser Alpha One Generation Two Service Manual :

save me hill part 3 german edition kindle edition - Sep 21 2023
web mar 29 2018 save me hill part 3 german edition kindle edition by rose sophia religion spirituality kindle ebooks amazon com

save me hill part 3 german edition kindle edition - Jul 19 2023
web select the department you want to search in
save me hill part 3 german edition by sophia rose - Apr 16 2023
web jun 13 2023 save me hill part 3 german edition by sophia rose this save me hill part 3 german edition by sophia rose as one of the greater part running sellers here
save me hill part 3 german edition copy uniport edu - Jun 06 2022
web may 23 2023 enjoy now is save me hill part 3 german edition below the percy jackson and the olympians book three titan s curse rick riordan 2007 05 in this third book of
save me hill part 3 german edition copy uniport edu - Apr 04 2022
web jun 17 2023 have remained in right site to start getting this info acquire the save me hill part 3 german edition partner that we have the funds for here and check out the link
silent hill 3 save theme extended youtube - Mar 03 2022
web oct 3 2013 the save theme of silent hill 3 extended to 15 minutes i didn t know the actually name for the track if there is one so i called it a theme enjoy
save me 3 song and lyrics by steve hill spotify - Jul 07 2022
web steve hill song 2007 preview of spotify sign up to get unlimited songs and podcasts with occasional ads
pc silent hill 3 savegame 100 save file download - Oct 30 2021
web jul 11 2020 with the evolution of online gaming platforms pc silent hill 3 savegame 100 save game file downloads have surged in popularity players frequently click on
save me hill part 3 german edition by sophia rose - Dec 12 2022
web save me hill part 3 german edition by sophia rose this man was blameless and upright he feared god and shunned evil 2 he had seven sons and three daughters 3 and he
silent hill 3 savegame download - Jan 01 2022
web silent hill 3 continues the series trademark brand of psychological horror and terrifying gameplay as a teenage girl named heather players must explore and unravel the
save me hill part 3 german edition pdf j t ellison book - Oct 10 2022
web save me hill part 3 german edition pdf right here we have countless books save me hill part 3 german edition pdf and collections to check out we additionally manage to
save me hill part 2 german edition kindle edition amazon in - Nov 30 2021
web save me hill part 2 german edition ebook rose sophia amazon in kindle store

save me hill part 2 german edition kindle edition - Feb 14 2023
web save me hill part 2 german edition ebook rose sophia amazon com au kindle store
save me hill part 3 ebook rose sophia amazon de books - Aug 20 2023
web hello sign in account lists returns orders shopping basket
save me hill part 3 german edition java gameplayer club - Sep 09 2022
web save me hill part 3 german edition this is likewise one of the factors by obtaining the soft documents of this save me hill part 3 german edition by online you might not require
save me hill part 3 german edition copy uniport edu - Aug 08 2022
web jun 30 2023 save me hill part 3 german edition is available in our book collection an online access to it is set as public so you can get it instantly our book servers saves in
pc silent hill 3 savegame save file download - Feb 02 2022
web mar 22 2016 description silent hill 3 is a horror game the player heather plagued by supernatural hallucinations it tries to get answers to his questions the player must
save me hill part 3 german edition pdf ncf ec2 west - May 05 2022
web save me hill part 3 german edition 1 save me hill part 3 german edition the silver spray the holy bible words of anthems in use in the cathedral church of chester re
save me hill part 2 german edition kindle edition - Jan 13 2023
web save me hill part 2 german edition ebook rose sophia amazon co uk kindle store
save me hill part 3 german edition kindle edition □□□□ - Jun 18 2023
web mar 29 2018 amazon co jp save me hill part 3 german edition ebook rose sophia kindle store
amazon co uk customer reviews save me hill part 3 german - May 17 2023
web find helpful customer reviews and review ratings for save me hill part 3 german edition at amazon com read honest and unbiased product reviews from our users
save me hill part 3 german edition pdf full pdf - Nov 11 2022
web web save me hill part 3 german edition a house on a hill mar 04 2023 hill of fire dec 01 2022 el monstruo every day is the same for pablo s father then one afternoon the ground
save me hill part 2 german edition kindle edition - Mar 15 2023
web feb 8 2018 save me hill part 2 german edition kindle edition by rose sophia romance kindle ebooks amazon com
theodor storms neues gespensterbuch beiträge zur geschichte - Mar 09 2022
web jun 14 2023 theodor storms neues gespensterbuch beiträge zur geschichte des spuks by karl ernst laage theodor

storms neues gespensterbuch beiträge zur

theodor storms neues gespensterbuch beitrage zur pdf - Oct 16 2022

web times for their favorite readings like this theodor storms neues gespensterbuch beitrage zur pdf but end up in harmful downloads rather than reading a good book

theodor storms neues gespensterbuch beiträge zur geschichte - Nov 05 2021

web aug 28 2023 theodor storms neues gespensterbuch beiträge zur geschichte des spuks by karl ernst laage book cellar bs as poetry fiction amp literature loot co za

theodor storms neues gespensterbuch beiträge zur geschichte - Jun 24 2023

web just mentioned the theodor storms neues gespensterbuch beiträge zur geschichte des spuks by karl ernst laage is globally compatible with any devices to read it is your

pdf theodor storms neues gespensterbuch beitrage zur - Feb 08 2022

web theodor storms neues gespensterbuch beitrage zur fantastik im realismus apr 24 2022 die marginalisierung der realistischen fantastik hat unterschiedliche gründe die

theodor storms neues gespensterbuch beitrage zur pdf - May 11 2022

web neues gespensterbuch beitrage zur what you gone to read theodor storms neues gespensterbuch beitrage zur 2019 08 25 melendez burgess zeitschrift für

theodor storms neues gespensterbuch beiträge zur - Aug 26 2023

web theodor storms neues gespensterbuch beiträge zur geschichte des spuks laage karl ernst isbn 9783804213340 kostenloser versand für alle bücher mit versand

theodor storms neues gespensterbuch beiträge zur geschichte - Dec 06 2021

web sep 25 2023 storms neues gespensterbuch theodor ab 2 01 may 19th 2020 vergleichen neues gespensterbuch beiträge zur groover sch bme hu 2 3

9783458330462 theodor storm neues gespensterbuch - Jun 12 2022

web abebooks com theodor storm neues gespensterbuch beitra ge zur geschichte des spuks insel taschenbuch german edition 9783458330462 by storm theodor and

theodor storms neues gespensterbuch beiträge zur - Dec 18 2022

web select search scope currently catalog all catalog articles website more in one search catalog books media more in the stanford libraries collections articles journal

theodor storm neues gespensterbuch beiträge zur - May 23 2023

web jan 1 1991 theodor storm neues gespensterbuch beiträge zur geschichte des spuks insel taschenbuch german edition

storm theodor on amazon com

theodor storms neues gespensterbuch beitrage zur pdf - Nov 17 2022

web theodor storms neues gespensterbuch beitrage zur pdf is available in our book collection an online access to it is set as public so you can download it instantly our

theodor storms neues gespensterbuch beiträge zur - Apr 22 2023

web mar 1 2011 amazon com theodor storms neues gespensterbuch beiträge zur geschichte des spuks 9783804213340 storm theodor books

theodor storms neues gespensterbuch beiträge zur geschichte - Aug 14 2022

web aug 22 2023 storms neues gespensterbuch theodor ab 2 01 may 19th 2020 vergleichen neues gespensterbuch beiträge zur geschichte des spuks storm 1991 isbn

theodor storms neues gespensterbuch beiträge zur geschichte - Feb 20 2023

web jun 12 2023 this theodor storms neues gespensterbuch beiträge zur geschichte des spuks by karl ernst laage as one of the majority running sellers here will totally be joined

theodor storm neues gespensterbuch beiträge zur alibris - Sep 15 2022

web buy theodor storm neues gespensterbuch beiträge zur geschichte des spuks by theodor storm karl ernst laage online at alibris we have new and used copies

theodor storms neues gespensterbuch beiträge zur geschichte - Jul 25 2023

web sep 18 2023 theodor storms neues gespensterbuch beiträge zur geschichte des spuks by karl ernst laage full text of jahresberichte für neuere deutsche storms neues

theodor storms neues gespensterbuch beiträge zur geschichte - Jan 07 2022

web aug 12 2023 theodor storms neues gespensterbuch beiträge zur geschichte des spuks by karl ernst laage author iet donnu edu ua 2023 08 12 12 03 38 subject

theodor storms neues gespensterbuch beiträge zur geschichte - Jan 19 2023

web theodor storms neues gespensterbuch beiträge zur geschichte des spuks by karl ernst laage by online you could not require more duration to devote to go to the ebook

theodor storms neues gespensterbuch beitrage zur pdf - Apr 10 2022

web theodor storms neues gespensterbuch beitrage zur 2019 12 27 victoria jaidyn theodor storms neues gespensterbuch brill das phantastische in kunst literatur

theodor storms neues gespensterbuch beiträge zur - Jul 13 2022

web theodor storms neues gespensterbuch beiträge zur geschichte des spuks on amazon com au free shipping on eligible

orders theodor storms neues
theodor storms neues gespensterbuch beiträge zur - Mar 21 2023
web amazon in buy theodor storms neues gespensterbuch beiträge zur geschichte des spuks book online at best prices in india on amazon in read theodor storms neues
theodor storms neues gespensterbuch boyens buchverlag - Sep 27 2023
web beiträge zur geschichte des spuks der dichter theodor storm hatte von jugend an eine besondere vorliebe für das unheimliche und gespenstige auch in seinen novellen
mangia bene corri forte alimentazione e integrazione per il - Oct 17 2023
web mangia bene corri forte alimentazione e integrazione per il running dalla 10k alla 100k è un libro di paolo godina pubblicato da correre nella collana finish line acquista su ibs a 17 10 alimentazione e integrazione per il running dalla 10k alla 100k paolo godina
mangia bene corri forte alimentazione e integrazione per il - Feb 09 2023
web mangia bene corri forte parla di alimentazione e di integrazione per il runner dalla 10k alla 100k ed è un testo scientifico dal taglio divulgativo rivolto ai podisti amatoriali e ai
news mangia bene corri forte alimentazione e integrazione per il - Jul 02 2022
web nov 12 2018 perchè è importante mangiare sano 1 mangiare sano ti rende più felice 2 mangiare sano rafforza il sistema immunitario 3 mangiare sano ti ripara il dna 4
mangia bene corri forte alimentazione e integrazione per il - Jan 28 2022
web più forte mangia bene corri forte alimentazione e integrazione per i migliori libri sulla corsa e il running aggiornato al 2020 mangia bene corri forte alimentazione e
mangia bene corri forte alimentazione e integrazione per il - Sep 16 2023
web scopri mangia bene corri forte alimentazione e integrazione per il running dalla 10k alla 100k di godina paolo spedizione gratuita per i clienti prime e per ordini a partire da 29
the 10 best healthy restaurants in singapore updated 2023 - Nov 25 2021

libro mangia bene corri forte online miabbono - Jan 08 2023
web may 26 2022 secondo molti esperti di nutrizione mangiare più cibi integrali è una strada veloce per migliorare la salute e prevenire le malattie come accennato gli alimenti
mangia bene corri forte alimentazione e - Jun 13 2023
web acquista online il libro mangia bene corri forte alimentazione e integrazione per il running dalla 10k alla 100k di paolo

godina in offerta a prezzi imbattibili su mondadori

mangia bene corri forte alimentazione e integrazione per il - Aug 15 2023

web mangia bene corri forte alimentazione e integrazione per il running dalla 10k alla 100k di paolo godina un testo di facile lettura che sottolinea l importanza di una corretta

mangia bene corri forte alimentazione e integrazione per il - Jul 14 2023

web mangia bene corri forte alimentazione e integrazione per il running dalla 10k alla 100k godina paolo amazon com au books

mangia bene corri forte alimentazione e integrazione per il - Mar 10 2023

web acquista mangia bene corri forte alimentazione e integrazione per il running dalla 10k alla 100k su libreria universitaria spedizione gratuita sopra i 25 euro su libreria

mangia bene corri forte alimentazione e integrazione per il - Sep 04 2022

web mangia bene corri forte alimentazione e integrazi mangia bene corri forte alimentazione e integrazione per il running dalla 10k alla 100k paolo godina 2018 the

mangia bene corri forte alimentazione e integrazione per il - May 12 2023

web find helpful customer reviews and review ratings for mangia bene corri forte alimentazione e integrazione per il running dalla 10k alla 100k at amazon com read

alimentazione per correre forte - Nov 06 2022

web aug 7 2017 calisthenics per correre meglio e più forte lo sapevi che il calisthenics ti aiuta a correre meglio e più forte cityrunners mangiare bene per correre meglio

16 fondamentali motivi per mangiare sano che forse non ti - Jun 01 2022

web mangia bene al mattino e riduci progressivamente le quantità di cibo con il trascorrere della giornata eat well in the morning and progressively less as the day wears on mangia

mangia bene traduzione in inglese reverso context - Apr 30 2022

web in generale si mangia bene ovunque sull isola in general you eat well everywhere on the island È un agriturismo bello e si mangia bene it s a nice farmhouse and you eat well

si mangia bene traduzione in inglese reverso context - Mar 30 2022

web lovely french restaurant excellent for gluten free 10 earle swensen s jewel 727 reviews open now steakhouse pizza menu the truffle mushroom soup was

mangia bene corri forte alimentazione e integrazi 2023 - Aug 03 2022

web news mangia bene corri forte alimentazione e integrazione per il running dalla 10k alla 100k just read report fikacivta

follow jun 19 2020

mangia bene corri forte alimentazione e integrazione per il - Dec 27 2021

web most authentic brittany crepes in singapore highly recommend and best enjoyed don t miss the french galettes and crepes 10 earle swensen s jewel 727 reviews open

mangia meglio corri più forte runner s world - Oct 05 2022

web È ormai dimostrato che un alimentazione sana ed equilibrata è determinante per la salute dell atleta e contribuisce al miglioramento della performance allo stesso modo un

amazon com au customer reviews mangia bene corri forte - Apr 11 2023

web compre online mangia bene corri forte alimentazione e integrazione per il running dalla 10k alla 100k de godina paolo na amazon frete grÁtis em milhares de produtos

mangiare integrale fa bene ecco i benefici e controindicazioni - Dec 07 2022

web nov 6 2019 mangia bene corri forte alimentazione e integrazione per il running dalla 10 km alla 100 km di paolo godina è un testo scientifico dall impostazione divulgativa

the 10 best healthy restaurants in singapore tripadvisor - Feb 26 2022

web alimentazione corretta per il runner e lo mangia bene corri forte alimentazione e integrazione per running a 7 50 trovaprezzi it gt sport e tempo libero pdf pleto